SPECIAL doors HANDBOOK

dafa door
EXPERT ON DOORS

DAFADOOR DOOR AND FURNITURE LTD. CO.
DAFADOOR KAPI VE MOBİLYA LTD. ŞTİ.

www.dafadoor.com

EXPERT ON DOORS

innovative solutions
in doors...

DAFADOOR DOOR AND FURNITURE PRODUCTS IND. TRADE LTD. CO.

INDEX

02 ABOUT DAFADOOR
06 WHAT ABOUT YOU?
07 USGBC CERTIFIED
10 GREEN
11 SPECIAL DOORS
12 HIGH MEETS CRAFTSMANSHIP
14 FIRE PROOF
16 SOUND PROOF
18 SMOKE PROOF
20 RADIATION PROOF
22 BULLET PROOF
24 WATER PROOF
26 MILESTONES
29 SELECTED PROJECTS
30 RITZ CARLTON HOTEL
32 CAPITAL CITY PLOT 9
36 CAPELLA CASTLEMARTYR HOTEL
42 JORDAN ARMED FORCES
50 BAKU PRESIDENTIAL PALACE
58 YACHT HAFEN RESIDENZ
60 ANTHILL RESIDENCE
62 KAZAKHSTAN PARLIAMENT BUILDING
64 MTC HQ
66 DEUTSCHE BANK HQ
68 BAGT KÖŞGI
70 CANADA EMBASSY
72 SEEB INTERNATIONAL AIRPORT
74 HILTON HOTEL
76 DELOITTE INTERNATIONAL HQ
80 DOUBLE TREE BY HİLTON
84 KALEIDESCOPE SHOPPING CENTER
89 ACCESSORIES
145 DAFADOOR TECHNIC
250 SURFACE FINISH
258 SELECTED REFERENCES

ABOUT DAFADOOR

Nergiz Decoration's extensive portfolio, developed over 30 years, includes manufacturing operations ranging from houses to airports. This variety serves as the main key to a strong and experienced production team and has been transfered to Dafadoor during last 12 years.

Dafadoor; a Nergiz Decoration company, is specialized in producing a wide variety of door designs compatible with nearly every architectural style. Dafadoor products are produced in Nergiz Decoration facilities. Dafadoor is one of the leading fire door producers, in the field of wooden doors, with the appearance of standard door and frame products. These products are available in a variety of veneers, styles, cores and sizes, and all must be considered before the right door is selected.

Continuous quality development, productivity increase and desire to serve sustainable design vision is the main motivation of Dafadoor to manufacture for various products for different projects. Dafadoor provides great range of doors that have been designed and manufactured to bring beauty, satisfaction, lasting performence and value to the Project. The firm puts its own distinctive mark on new concepts of living and creating a uniqe style with the combination of handwork and mass production.

In various projects such as hospitals, hotels or business centers sound insulations are indispensable in order to provide a comfortable living and working area. The sound isolating doors is superbly applicable for those manufacturing processes where noise reduction up to 48 dB are being required.

Dafadoor's production process depends on "No Fire No Sound" philosophy. During this process special fire doors have been tested and certified according to the latest European and DIN norms and meets the highest isolation criterias. **No Fire No Sound** philosophy combines highest protection and safety functions with various architectural design possibilities. In this magazine you may find some examples of our projects but please consider these as simple clues to what can be done because Dafadoor features that only limit for the production, is the limit of the designer.

They choose Dafadoor;
what about you?

Hotels need to be flowless in every detail. It is precisely for this reason that Dafadoor special doors combine the highest requirements in terms of fire protection, soundproofing, safety and other essential properties with a unique design. In every style. And in many renowned hotels worldwide. What about yours?

USGBC Certified;
First and Only Wood Production Company in Turkey

The US Green Building Council is a non profit organization which is committed to prosperous and sustainable future through cost - efficient and energy - saving green buildings. Lead - Leadership in Energy and Environmental Design is developed by USGBC in 2000. Certification provides independent third - party verification that building home or community was designed and build using strategies aimed at achieving high performance in key areas of human and environmental health; sustainable site development, water savings, energy efficiency, materials selection and indoor environmental quality.

Everything about our know-how

Dafadoor meets all relevant requirements in the construction sector. The special door technical book provides clear, detailed and comprehensive information about doors and this document is an essential work of reference for any planner and designer.

Experience is the key to success. Therefore there is always something new to know. Comprehensive support includes technical documentation and the special doors technical book.

System functionality

The limits of Dafadoor products depends on the requirements and wishes of the designer.

Door leaf construction
Dafadoor doors have all the necessary certifications regarding of several combination requirements.

Hinge, lock, handle
Dafadoor offers an extremely wide range of hinges, locks, striking plates, handle fittings and accessories for functionality and reliable protection.

Closers
Dafadoor fits fire doors to suit the respective requirements with approved, high-performance door closers. Depending on the application, the devices can be installed as visible or concealed.

Seal system
In order to combine multifunctionality with comfort and heat insulation, it is possible to back-fill the construction joint with either foam or mineral wool. Dafadoor seals the joint clearance between the door leaf, frame and floor joint using tested seal systems.

Sustainability
Doors which open through green

GREEN

Architecture shapes our environment, characterises our lives and triggers emotions, reactions and discussions across the generations. All parties involved in a construction project have direct responsibility. Dafadoor targets to serve this idea every stage, including through purchasing raw materials all the way to the final production.

Sensitive use of resources

Energy-efficient technologies

In all steps of production, top priority should be the efficient usage of materials, implementaion of energy saving proccesses and avoiding waste. This means in real terms:

- Ecological production by means of cutting optimisation.
- Waste wood and chips are used to generate heat.
- Packaging materials are recycled.
- Ongoing investments are made in energy-efficient technologies.

Durability and high quality

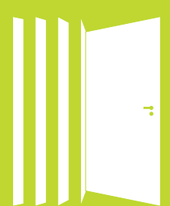

Closing cycles as per DIN EN 1191

Sustainable products retain their value and functionality in the long term. A large number of door models are proven durable with 1 million opening and closing cycles as per DIN EN 1191.

Fire protection

With approvals of the building authorities for fire safety classes T30/EI30, T60/EI60, T90/EI90 Dafadoor meets all requirements. We also provide fire certificates for various international markets/ standards.

Smoke protection

The combination of fire protection and smoke protection can save lives. requirements RS-1 and RS-2 as per DIN 18095 / DIN EN 1634-3.

Sound insulation

In particularly sensitive areas, effective sound insulation must be ensured. Dafadoor sound insulation doors achieve laboratory test results of Rw,P 32, 36, 42, 44.

Radiation protection

In order to protect effectively against X-rays, gamma rays or electron radiation, it is possible to equip radiation protection doors with equivalent lead values up to 6 mm. Individually designed wood finishes or glazing integrate the doors optically into the interior design.

Bullet resistance

The safety of a door needn't be visible, since it is possible to integrate even bullet resistance class M3 (calibre 44 Magnum, at a shooting distance of 3 m) with style and unobtrusiveness. It can be combined security classes of wk2/wk3/w4.

Wet room

Dafadoor developed a door construction without wood or wood material in wet areas. Complete systems with corrosion protected fittings, creative designs, HPL finishes.

Damp room

Dafadoor also offers complete solutions for rooms with short-term damp conditions, where door finishes, edgings and bottoms are subject to extreme use. Available upon request with one or two leaves, as a solid door.

HIGHTECH MEETS CRAFTSMANSHIP

Comprehensive know-how joins forces with innovative technology, traditional craftsmanship and high levels of motivation in the Dafadoor's plant in Ankara. So it comes as no surprise that the special doors produced here not only have extraordinary performance profiles, but also set standards in terms of design, materials and performance. The advanced production systems are powerful and flexible and ensure consistently high quality even in the case of large orders and deliveries at short notice. Last quality check is done by hand. No machine can take the place of a keen sense of fine materials and workmanship.

Thanks to innovative production technology, Dafadoor is able to produce special doors in large numbers or in different sizes of one with speed and consistently high quality.

Precise technology, innovation and the eye for detail.

The level of craftsmanship of the highly qualified staff as the use of state-of-the-art machine technology is a guarantee for perfect results across the entire production process.
Flexible manufacturing processes, high capacities and individual production methods ensure high quality, short production period and several combinations.

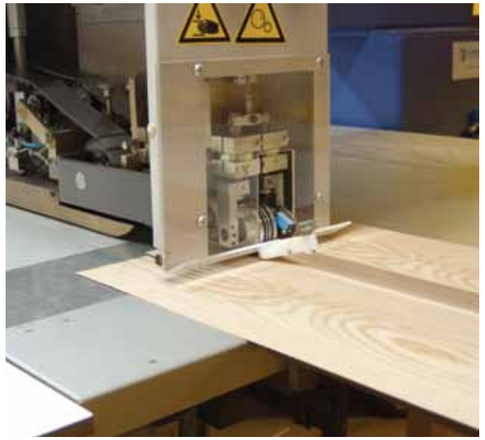

Fire Proof

www.dafadoor.com

Hafen im Hafen
ROSTOCK - GERMANY

Fire Proof

Dafadoor is one of the top 5 fire door producers worldwide, in the field of wooden doors, with the appearance of standard door and frame products. These products are available in a variety of veneers, styles, cores and sizes, and all must be considered before the right door is selected.

No Fire No Sound philosophy combines highest protection and safety functions with various architectural design possibilities. The Firm provides a variety of products which are certified, thoroughly tested by independent institutes and testing authorities, and protected by numerous patents such as BS, DIN, EN and Russian GOST standards.

In addition to the fire and sound insulated doors Dafadoor offers safety solutions in order to prevent or limit damage.

Certificates

Is produced in Nergiz Decoration facilities.

Sound Proof

Ritz Carlton Hotel
MOSCOW - RUSSIA

Sound Proof

Minimum requirements of the airborne sound insulation for doors

Due to the fact that the DIN 4109 has been introduced as technical building regulation in all European states and many other countries, the minimum requirements for the sound insulation between certain rooms and areas are mandatory .

The DIN 4109 allows three different standards for the airborne sound insulation in order to prevent sound propagation from external living and work spaces. These are according to application area organised in sound insulation values Rw,P 32 dB, Rw,P 37 dB and Rw,P 42 dB.

If necessary it may be appropriate to determin the sound insulation values in the tender specifications according to the increased recommondations of DIN 4109 (see bracket values).

Is produced in Nergiz Decoration facilities.

Smoke Proof

www.dafadoor.com

Capella Hotel
CORK - IRELAND

Smoke Proof

Answers to the requirements and test criteria of fire doors and fire resistant glazing which are regulated in the standard DIN standard DIN EN 4102.
In testing institutes, at least two fire tests are made with doors. The DIN EN 1634-1 is a recently introduced, tightened test standard for fire protection closings. Smoke control doors according to DIN 18095 hinder the passage of smoke.
The fittings of these doors have to be made of materials which guarantee that their functions are not affected up to a maximum temperature of 200 degree Celsius. Smoke protection doors are not fire protection closings according to DIN 4102.

Is produced in Nergiz Decoration facilities.

Radiation Proof

www.dafadoor.com

Radiation Proof

DIN 6834 Radiation-Protection-Doors

Radiation-Protection-Door sets, types 3 N and 16 N, are available with lead (Pb) inlay in the configuration as solid door, door with vision panel and door with top panel. They are mostly used in order to block x-rays, gamma rays and thermionic rays, preferably in medically used rooms, e.g. rooms for diagnostics and therapies.

The Radiation-Protection is achieved by including a lead inlay in the door leaf structure. The thickness of the lead inlay (in mm) is defined by the so called lead equivalent value according to DIN 6845. The lead equivalent value of a door is determined by the sum of the thickness of the two lead inlays in the door leaf.

The required lead equivalent value of a Radiation-Protection-Door is determined by the radiation protection plan according to DIN 6812, 6846 or 6847 for the construction of an according complex. The Radiation-Protection value of the door has to match the requiered lead equivalent value required to shield the radiation.

Bullet Proof

www.dafadoor.com

Jorden Armed Forces
AMMAN - jORDEN

Bullet Proof

The requirement of the bulletproof classes M2 and M4 are met, on the basis of the tests of the resistance class C2 and C4 according to DIN 52290, part 2. Depending on the type of the operational demands the bullet resistance class is determined. In order to confirm the resistance class M2, a .357 Magnum is fired off from a 3 meter and to confirm the resistance class M4, a .308 Winchester is fired off from a 10 meter distance.

Bulletproofdoors are used in areas with increased security requirements against invasions and raids. For example, banks, savings banks, airports, police stations, ministries and embassies are the commonly used areas for the bullet resistance doors.

Is produced in Nergiz Decoration facilities.

Water Proof

www.dafadoor.com

Water Proof

The test for Wet Room Doors consists of a cyclic sprinkling of the opening surface of the door leaf takes place in a special test stand. Each of the 48 test cycles consist of 4 minutes spraying with "warm" water and 26 minutes of drying. After the test the door leaf is examined for effects on the general planarity, the water absortion and the moisture expansion as well as any visually detectable damages.

The usage of Wet Room Doors are recommended for internal rooms and areas with an extremly high humidity. Examples for damp and wet rooms are for example in sanitary facilities, shower rooms, sauna areas and indoor swimming pools, sports halls, hospitals and hotels.

The door leaf construction (filling, edges and top layer) of Wet Room Doors does not consist of wood or wooden materials, but unexceptionally of moisture-resistant materials. As top layer only HPL sheets are used, because veneer would due to hyproscopicity (its characteristic to soak up water) macerate and therefore rip open the finish.

Is produced in Nergiz Decoration facilities.

80 MILESTONES

1980
Metin Nergiz Design
Atelier was founded at
Siteler / Ankara / TURKEY

1992
First abroad project
was completed

1995
Metin Nergiz Design Atelier
officially turned into a
family-owned business by
changing its name to
NERGIZ DECORATION
Design Industry Trade & CO.

1998
With a view of
satisfying the
production of specific
doors in the wood
application area
"DAFADOOR" was
incorporated as a
trademark within
NERGIZ DECORATION.
Due to its expanding
structure,company
relocated to
Çubuk / Akyurt district,
which also involves
the airport.

2003
The firm moved into a new production
plant, which had been completed
regarding the needs of the modern
times and the production capacity
was increased by 40%

2007
DAFADOOR
DOOR & FURNITURE
Industry & Trade Ltd. CO.
became a corporation
within the Nergiz Group.

2008
In order to meet the different
production measurements,
encountered in the field of
furniture packaging, **KARA KUTU**
PACKAGING Industry & Trade
Ltd. CO. was established.
The Firm still serves to the other
companies in the sector

2010
In its 30th year,
company continues to progress
by turning its direction into the
renewed face of the sector.

RON "Republic of Narcist" is to change the philosphy
of the company and started to serve to the end
users. **RON** is internet based company which finds
eco solutions with good designed objects.

... to be continued

32 years

www.dafadoor.com

SELECTED PROJECTS

Wallpaper*
BEST BUSINESS
HOTEL 2008
Awarded

Ritz Carlton Hotel

MOSCOW - RUSSIA

THE RITZ-CARLTON®

Client : Polimeks
Designer : HID Hotel Interior Design

The Ritz-Carlton Moscow Hotel's debut, with architecture by Mosproject and interiors by Peter Silling & Associates, symbolizes the evolutionary changes taking place in Moscow. Since the hotel is situated in a historic neighborhood, the façade and interiors were designed to respect and complement the area, featuring an imperial Russian façade and chic, elegant interior with unique contemporary accents.

General Manager Oliver Eller describes the overall design style as being "based on the best classical traditions of Russian and European architecture", mentioning the grand staircase, abundant use of gold leaf in the décor and "plasterwork performed by British artisans previously employed by Buckingham Palace" as illustrative examples.

The Ritz-Carlton also offers the largest spa in Moscow, operated by ESPA. The 2000m^2 space includes 14 treatment rooms, a black-bottomed 110m^2 swimming pool lit by fibre-optic Swarovski crystal lights as well as the full range of experiential extras such as hotpools, ice fountains, lifestyle showers and a candle-lit relaxation room.

Capital City Plot 9

MOSCOW - RUSSIA

Client : Ant Construction
Designer : Iosa Ghini Associats

The modern high level business center forms part of the Capital City multi-purpose complex, which is situated in MIBC Moscow City in the first line of buildings, with a construction area of approximately 60 hectares. Capital City HQ is located in the 17 th floor of the business center with an ultra modern interior application, which was designed by Massimo Iosa Ghini and serves as a lean but ambitious office ambiance with sophisticated characteristics.

On this project all glass and wood particians were produced by Dafadoor with all lockable and self closing glass doors. All curves were given by computerized systems to follow the lines on the marble floorings.

Capella Castlemartyr Hotel

CORK - IRELAND

Client : Johh F. Supple Co.
Designer : HID Hotel Interior Design

CAPELLA™
HOTEL & RESORTS

Elegant Luxury is welcoming you

The Capella Hotel at Castlemartyr Resort is located between the East Cork towns of Midleton and Youghal in the rustic village of Castlemartyr just miles from the rugged Irish coastline. The 220 acre estate is home to a 103 bedroomed Capella Hotel where the 17th century Manor House is the centerpiece. The peaceful combination of classical and contemporary design features surrounds the Knights Bar, dining rooms, a 24,000 sq ft Spa, boardrooms, grand ballroom and the Presidential Suite.

In the part mentioned as Old school; presidential suites take the main part with the doors which covers around 150cm wall thickness. Textile wall coverings have perfect combination with huge white stained frames.

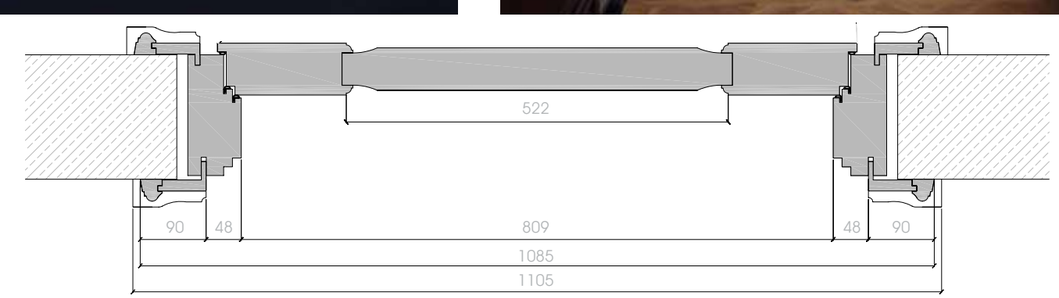

1 Detailed drawing of a 54mm thick T.30 fire door with 36dB sound insulation by double leaf.

2 Sapelli veneered meeting room door with T30 fire proof and 38dB sound insulation. When the door is open, the leaf is in the same level with the wall coverings so that it is invisible.

Jordan Armed Forces

AMMAN - JORDAN

Client : Yüksel Construction
Designer : GM Architects

1 This is a view of a door which is located in the lounge area of his magesties. T60 fire proof 42dB sound insulated huge double leafs and with bullet resistence for resistance gun.

2 A commander office with pelesandro veneer for T60 fire rated and 38dB sound insulated door.

1

1

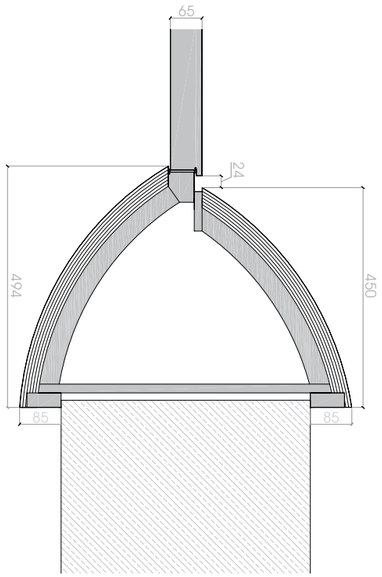

2

Strategically located on a hill overlooking the city & bordering the King Hussein Medical City (Jordan's largest military hospital), the Jordan Armed Forces New General Headquarters Project is designed with international standards utilizing state-of-the-art engineering concepts including versatile working environment which allows for spatial expansion and adaptation. The architectural design is based on a thematic composition, highlighting an ordered and regimental military townscape peering over a long stone façade using the metaphor of a defensive city wall.

KING'S DOOR

Production Stage

"The King's Door" serves as the main door which stands as a gateway between the atrium, that is surrounded by the wood paneling, and the King's usage areas, such as his offices and his resting rooms.

The production stage of the whole process took 2 weeks to be completed and had commenced by taking identical print outs of the piece. The production of only the eagle took around 1,5 week.

During this period of time the effective utilization of the CNC machine resulted in the production of the lines, the emblem of the eagle and the eagle itself. Also the blocks of the gigantic frame was again made by CNC.

As the machines were being used skillfully, the manuel labor outshined and turned the common materials into a piece of art.

Since all the components of the veneer were nonstandart and the shape of the brass material isn't straight with a form of an arc, the mastery showed itself in the hands of the workmen.

"The King's Door" weighs 650 kg. The camber surface is neither made of metal nor steel. On the contrary it is produced of wood which stands as an advantage taking into consideration of the total weight.

After the production had been completed, it took 30 people to carry the door to the relavent floor and 15 people to montage it.

Jorden Armed Forces
AMMAN - jORDEN

Traditional craftmanship in contemporary design

Every project begins with a weighing up of the idea specifications, objectives and the alternatives Dafadoor understands its role as a solution partner to its clients.

Baku Presidential Palace

BAKU - AZERBAIJAN

Client : Besix - Mesa Jv
Designer : Interart - Paris

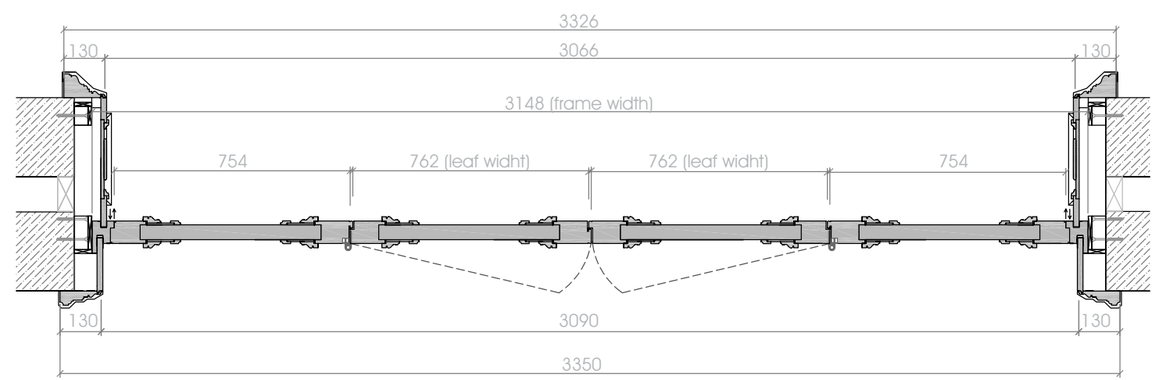

In the main entrance of negotiation room, door had (4) four leaves and was 4.50m high. 2 door leaves were fixed, other 2 were active with self closing menchanism and invisible automatic flush bolts for 60 minutes fire rates.

Baku Presidential Palace
BAKU - AZERBAIJAN

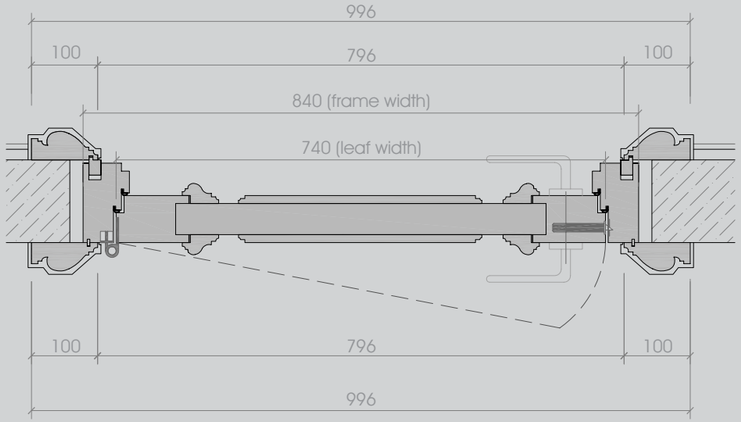

In this project all of the ornaments were inspired from Versailles Palace, France. All the hinges were specially produced by German company Simonswerk.

1. Magnificient ballroom doors were T60 firerated with 42dB sound insulated.
2. Negotiation room entrance doors were glazed with double sided mirrors.
3. In this project most of the doors are 60 minutes fire rated and 38dB sound insulated where as with their height, project becomes difficult but not impossible.

Yacht Hafen Residenz Hohe Dune

ROSTOCK - GERMANY

Client : HDM
Designer :

YACHTHAFENRESIDENZ
HOHE DÜNE
YACHTING & SPA RESORT

Since September 15, 2005 the marina residence Hohe Düne in Rostock-Warnemünde/Germany welcomes its guests. Hafen im Hafen is situated on a peninsula in proximate vicinity to the Baltic Sea beach between the Old Stream, the Warnow mouth and the new marina. The elegant environment of the hotel is a result of the flawless practise of wood work.

Anthill Residence

ISTANBUL - TURKEY

Client : Ant Construction
Designer :

Anthill project is the highest twin towers of Turkey. There are 810 apartments with the special services of Fraser Palace. All wood works were produced by Nergiz Decoration and doors were by Dafadoor. In this project 3500 doors were produced with special concealed hinges. Top floors are reserved for Fraser Hotel.

ANTHILL
RESIDENCE

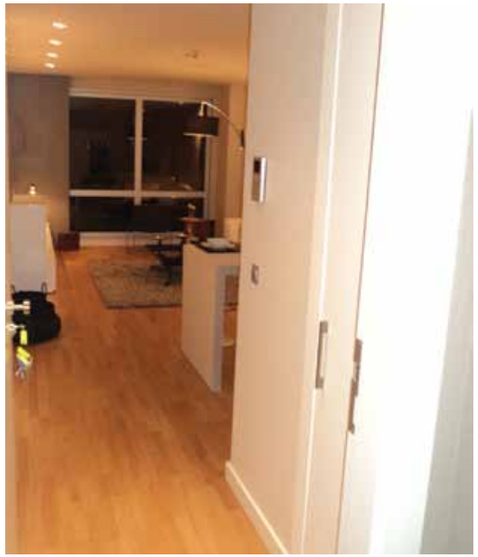

The structure, sitting on a 28.000m² area in Astana, consists of 4 blocks. Kazakhstan Parliament Congress Building is one of the most important architectures to enforce the blossoming modern image of Astana. Besides the image of the building with an unusual and representative quality, its functionality was also elaborated. The modern architecture integrated into traditional Kazakh motifs, and the high technology define the modern Kazakhstan very well.

Kazakhstan Parliament Building

ASTANA - KAZAKHSTAN

Client : Ahsel Construction
Designer : Nergiz Profit

MTC HQ (Sistema Gals)

MOSCOW - RUSSIA

Client : Sistema Gals
Designer : Interart

The ancient type facade carries the marks of the classical design into the interior of the building. The attentive practise of the wood work in all locations compose an elegant and royal atmosphere. The application of the wood veneer was used in conjunction with the brass plates and was compatible with the gold leaf frames through the walls.

Deutsche Bank HQ

MOSCOW - RUSSIA

Client : Mercury
Designer : Murray A'laoire Architects

The modern line of the office can be best observed by the pretentious application of the leather and fabric technics used in the panels. The bold blend of various materials all around office resulted in an organized and elegant style. Wood veneered corridors are combined with use of glass. It is easy to feel that the decoration reflects the serious and modern point of view of the firm.

Deutsche Bank

Bagt Köşgı

ASHGABAT - TURKMENISTAN

Client : Polimeks
Designer : Polimeks

Bagt Köşgı is located on the south west of Ashkabat. This project is monumental with its 32 meters sphere for the city. The building contains hotel rooms, wedding halls and multifunction halls. This remarkable project was equiped by Dafadoor and Nergiz Decoration.

Canada Embassy

ANKARA - TURKEY

Client : Yüksel Construction
Designer : Hok

The new Canadian Embassy is located on one of the city's steep hills with a great difference of 9 metres from front to back. The building consists of an administrative tower and a low-rise, more public pavilion with a linking multi-storey space featuring a grand stair. This stair is accompanied by wide wall panellings made of wood veneer, which can also be seen in the suspanded ceiling panellings and in-room wall panellings. By the skillfull combination of veneer and glass, the embassy has an extremely simple but elegant interior, that is in a harmony with the modern and solid outside appearance.

Seeb International Airport

MUSCAT - OMAN

Client : Erenport
Designer : Halcrow International

Oman-Seeb International airport is a very important project for its close region. On this new developing region it will be used as a hub. This new terminal is the extension of the old one. In the following years it is planned to built up a new airport building for increasing interest to this area.

❶ Extremely high doors and wide passages posed a very special challenge for the planning and production of the elements.

❶

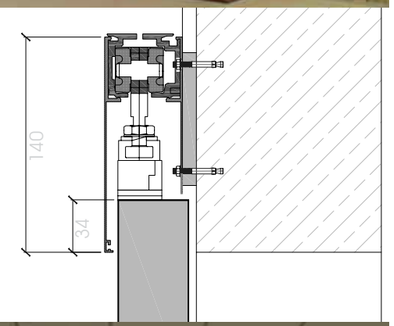

❶

Hilton Hotel

ANKARA - TURKEY

Hilton

Client : Sabancı Group
Designer : Turner

The Hilton Hotel stands in the center of the heartbeat of Ankara, Kavaklidere. Ranging from intimate rooms to sprawling suites and personal apartments reflecting a commitment to refined decoration. Warm colors and clean lines unite, creating a contemporary and ancient harmony reflective of the city's own character. The lobby has the ottoman ambiant with inviting decoration consits of wood veneers and velvet furniture.

Deloitte International HQ

ALMATY - KAZAKHSTAN

Client : Yüksel Construction
Designer : Som-Skidmore, Owins & Merrill LLP

Almaty Financial district is the largest financial center in Central Asia. In the complex, world famous financial companies were located like Kazkommertz Bank, Deloitte International and Pricewaterhouse coopers.
Views to the surrounding Tien Shan Mountain range are captured from two atria that together create a central "canyon" through the building. A six-story glass wall reveals the atrium to the city and fixes the building as a monumental presence on Al-Farabi Avenue.

Kazkommertsbank is one of the largest corporate and retail banks in Central Asia and located in the anchor building of the Almaty Financial District. It takes place in one of four buldings which is designed by Skidmore, Owins & Merrill LLP

Deloitte International is located in the center of the financial district in Almaty. Some of their neighbours in the complex are Kazkommertsbank, Bank Center Credit and the RFCA. The Deloitte Almaty head quarter is situated in 3 floors with the total office area of 7,500 m^2. The corridors and the office rooms are made of different coloured wood veneers, used with the combination of ground glass and the aluminium profiles. Despite of the common wood application in the reception and the other places, communal areas are surprisingly colourful with lively details.

Deloitte.

HOTEL

Double Tree by Hilton

ISTANBUL - TURKEY

Client : Sonkar Otomotive
Designer : Kontra Design

DOUBLETREE
BY HILTON
İSTANBUL - AVCILAR

Welcome to highest steel structure building of Europe. Largest Doubletree Hilton of Turkey; established in Avcılar İstanbul very close to the main airport.

In the project Dafadoor produced 30 min fire rated doors with 38db sound insulation in oak veneer finish. Wall coverings and other wooden products done by sister company Nergiz Decoration. By that, there is perfect match between doors and wall coverings.

26 story building furnish very short time like 3 months. 250 rooms fully furnished with high quality oak veneer and very special matt finish.

Kaleidescope Shopping Center

MOSCOW - RUSSIA

калейдоскоп

Client : Ant Prokans
Designer : SCG London

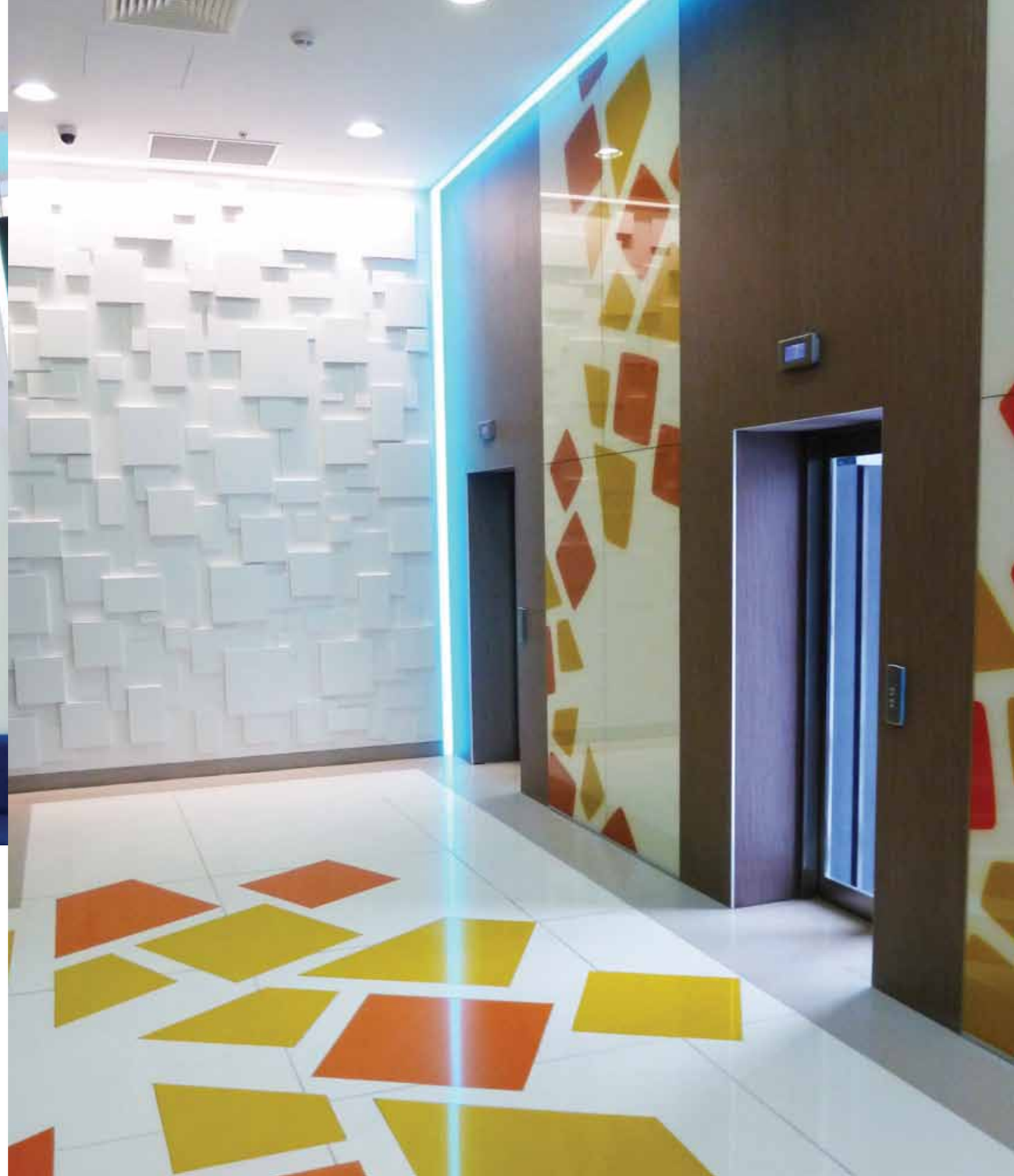

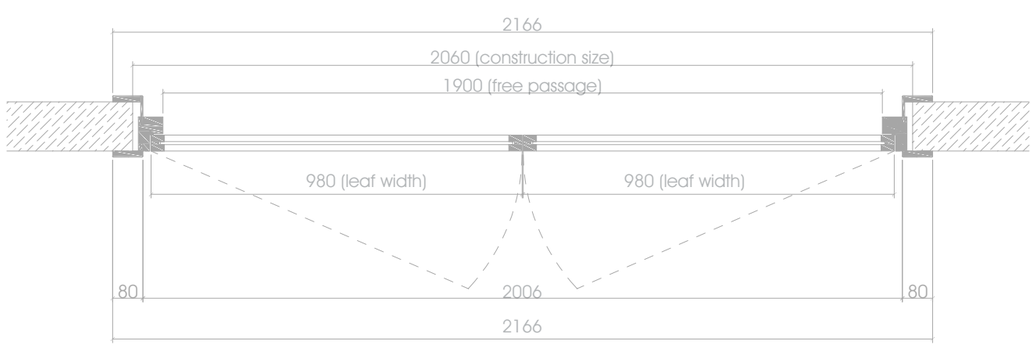

калейдоскоп

Kaleidoscope Shopping mall one of the new, contemporary designed address for shopping.

In the project there are several type and style doors will found. Most exciting ones are 60 min fire rated and 42db sound insulated wooden doors and new tech: full glass doors with 30 min fire rated. In the project there are also double full glass doors with 30 min fire rate with this new stylish form; building gained very modern face.

In almost every door key card preperation was setted for future adjustment in scenerio.

ACCESSORIES

91 HINGE
101 DOOR CLOSER
107 LOCK
117 DOOR HANDLE
128 PUSH PLATE
129 PULL HANDLE
132 KICK PLATE
133 DOOR VIEWER
134 DOOR LOUVER
134 FLUSH BOLT
135 AUTOMATIC DOOR SEAL
136 CYLINDER
137 DOOR STOP
138 PANIC BAR
141 SLIDING DOOR MECHANISM
143 SECURITY LATCH

PINTOGRAMS

- HINGE
- GRILL
- DOOR CLOSER
- FLUSH BOLT
- LOCK
- AUTOMATIC DOOR SEAL
- DOOR HANDLE
- CYLINDER
- PUSH PLATE
- DOOR STOP
- PULL HANDLE
- PANIC BAR
- KICK PLATE
- SLIDING DOOR MECHANISM
- DOOR VIEWER
- SECURITY LATCH

FEATURES

- ISO 9001-2008 CERTIFICATES
- SOUND ISOLATION
- CE CERTIFICATES
- BSI REGISTERED FIRM
- FIRE RATED
- DURABLE

MATERIALS

HINGES

www.dafadoor.com

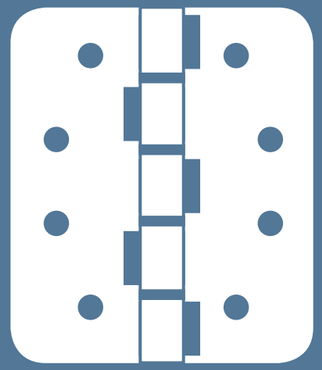

DAFADOOR

(Unrebated Hinge)

LOAD CAPACITY	MATERIAL	CODE
80 kg	Stainless Steel	AKS.MNT.00018
	Polished Brass	AKS.MNT.00066

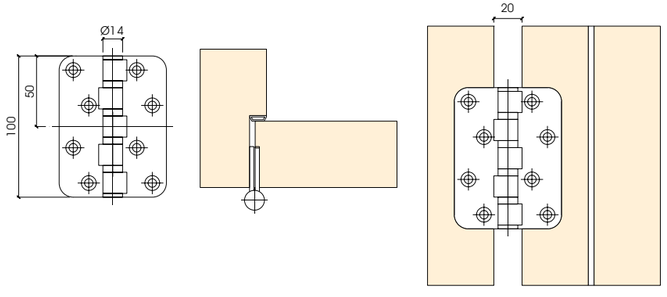

GENERAL FEATURES

Dafadoor hinges are for timber,metal or aluminium unrebated doors where high frequency is expected. Dafadoor hinges are fire rated and have a load capacity of 80 kg. It may be used long time without maintenance and it is right and left hand applicable.

STANLEY

(Rebated Hingle)

LOAD CAPACITY	MATERIAL	CODE
58 kg	Stainless Steel	AKS.MNT.00092.SS
	Polished Brass	AKS.MNT.00092.PB

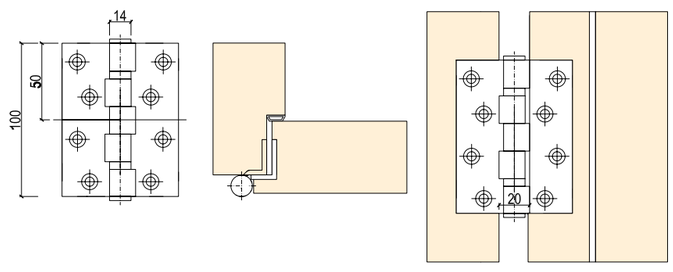

GENERAL FEATURES

Stanley hinges are for timber,metal or aluminium rebated doors where high frequency is expected. Stanley rebated hinge has a load capacity of 58 kg. It is also right and left hand applicable.

STANLEY 2060

(Spring Hinge)

LOAD CAPACITY	MATERIAL	CODE
60 kg	Stainless Steel	AKS.MNT.00045.SS

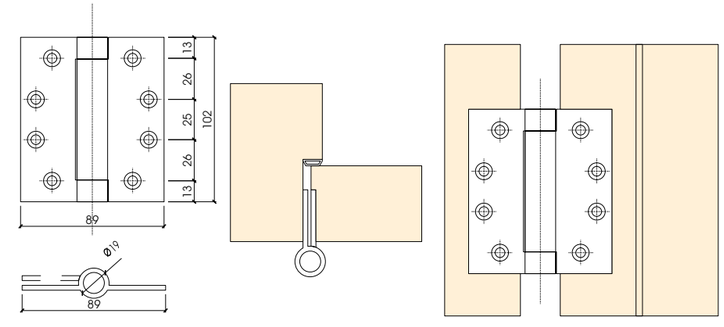

GENERAL FEATURES

For labeled fire doors, stairwell doors, motel and hotel guest room doors, apartment unit entrance doors. Meets NFPA80 standard for 3 hour fire doors (NFPA-80 stipulates minimum of 2 spring hinges shall be used on labeled doors) Closing power is adjustable up or down.

DEMİRCİ

(Swing Hinge)

LOAD CAPACITY	MATERIAL	CODE
34 kg (3 Hinges)	Stainless Steel	AKS.MNT.00085.SS
	Polished Brass	AKS.MNT.00085.PB

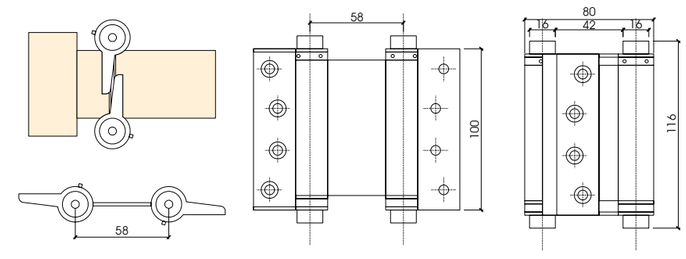

GENERAL FEATURES

Swing Door hinges provide a practical use in timber,metal and aluminium doors with a load capacity of 34 kg. It also provides 3 different colour options.

HAFELE

(Swing Hinge)

LOAD CAPACITY	MATERIAL	CODE
34 kg (3 Hinges)	Stainless Steel	AKS.MNT.00091.SS
	Polished Brass	AKS.MNT.00091.PB

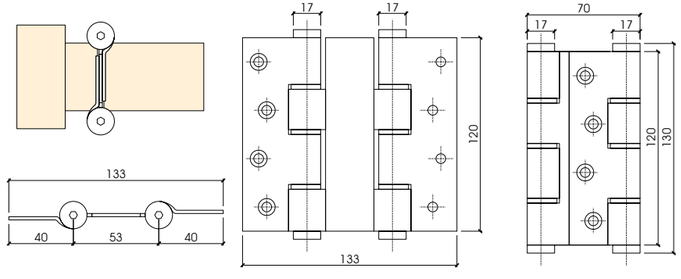

GENERAL FEATURES

Swing Door hinges provide a practical use in timber,metal and aluminium doors with a load capacity of 120 kg. It also provides 3 different colour options.

SIMONSWERK VN2929/100

(Unrebated Hingle)

LOAD CAPACITY	MATERIAL	CODE
100 kg	Chrome	AKS.MNT.00007.CH
	Polished Brass	AKS.MNT.00007.PB
	Stainless Steel	AKS.MNT.00007.SS

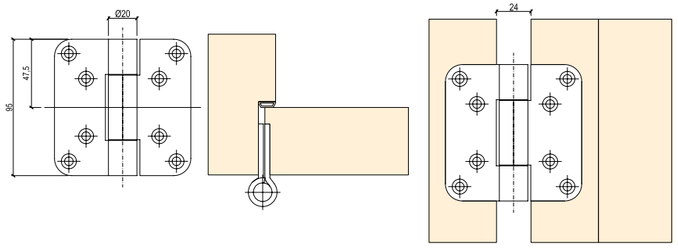

GENERAL FEATURES

Simonswerk VN 2929/100 for unrebated timber, aluminium and metal doors with block frames. CE-certified, load capacity 100 kg, knuckle length 95 mm, knuckle diameter 20 mm, right hand and left hand applicable.

SIMONSWERK VX7939/100

(Rebated Hingle)

LOAD CAPACITY	MATERIAL	CODE
100 kg	Chrome	AKS.MNT.00052.CH
	Polished Brass	AKS.MNT.00052.PB
	Stainless Steel	AKS.MNT.00052.SS

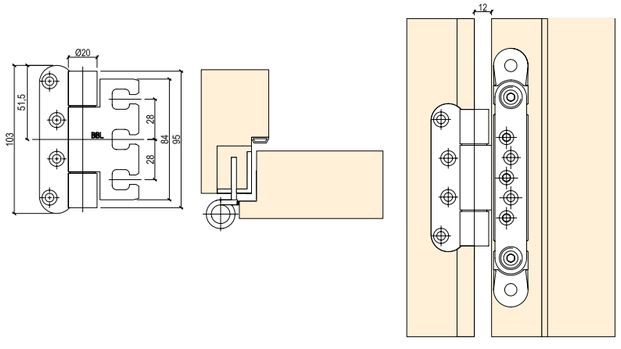

GENERAL FEATURES

Simonswerk heavy duty hinge VX 7939/100 for rebated doors with timber, steel or aluminium frames with three-dimensionally adjustable receivers. CE-certified, load capacity 100 kg, knuckle length 95 mm, knuckle diameter 20 mm, right hand and left hand applicable.

SIMONSWERK VX7939/100FD

(Rebated Hingle)

LOAD CAPACITY	MATERIAL	CODE
100 kg	Chrome	AKS.MNT.00087.CH
	Polished Brass	AKS.MNT.00087.PB
	Stainless Steel	AKS.MNT.00087.SS

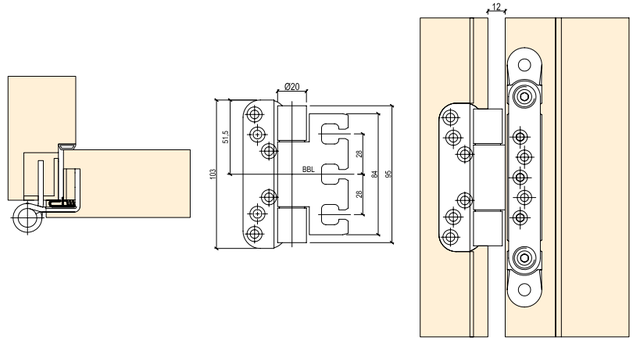

GENERAL FEATURES

Simonswerk heavy duty hinge VX 7939/100 FD with groove for continuous acoustic seal for rebated soundproof doors with timber, steel or aluminium frames with three-dimensionally adjustable receivers. CE-certified, load capacity 100 kg, knuckle length 95 mm, knuckle diameter 20 mm, right hand and left hand applicable.

SIMONSWERK VX7729/100

(Unrebated Hingle)

LOAD CAPACITY	MATERIAL	CODE
100 kg	Chrome	AKS.MNT.00030.CH
	Polished Brass	AKS.MNT.00030.PB
	Stainless Steel	AKS.MNT.00030.SS

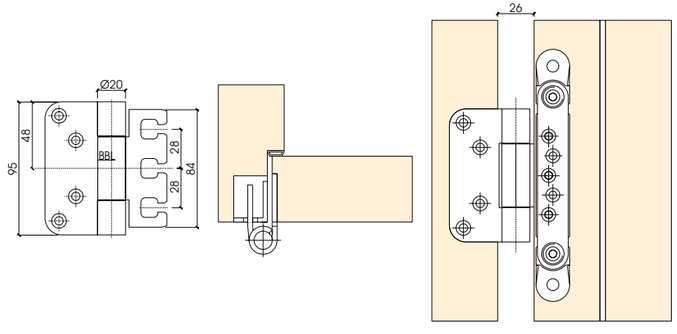

GENERAL FEATURES

Simonswerk Heavy Duty Hinge VX 7729/100 for unrebated doors with timber, steel or aluminium frames with three dimensionally adjustable receivers.Size 100 mm, knuckle diameter 20 mm, usable DIN right and left handed.

SIMONSWERK VX7729/120

(Unrebated Hingle)

LOAD CAPACITY	MATERIAL	CODE
120 kg	Chrome	AKS.MNT.00015.CH
	Polished Brass	AKS.MNT.00015.PB
	Stainless Steel	AKS.MNT.00015.SS

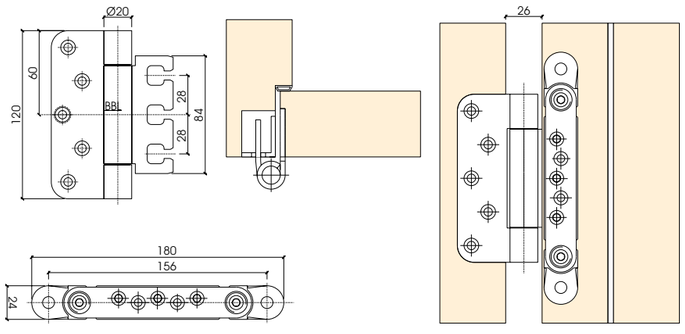

GENERAL FEATURES

Simonswerk heavy duty hinge VX 7729/120 for unrebated doors with steel frames with receiver. CE-certified, load capacity 120 kg, knuckle length 120 mm, knuckle diameter 20 mm, right hand and left hand applicable.

SIMONSWERK VX7729/160

(Unrebated Hingle)

LOAD CAPACITY	MATERIAL	CODE
200 kg	Chrome	AKS.MNT.00088.CH
	Polished Brass	AKS.MNT.00088.PB
	Stainless Steel	AKS.MNT.00088.SS

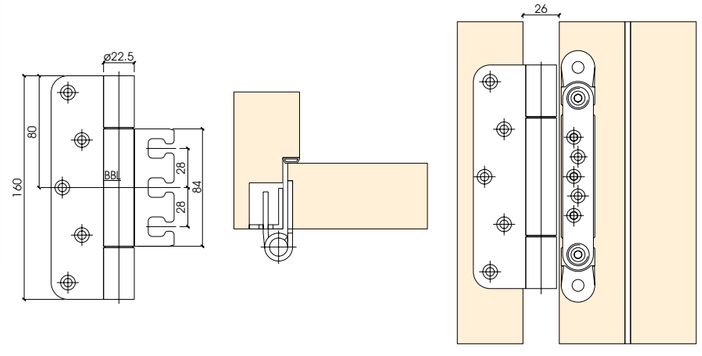

GENERAL FEATURES

Simonswerk Heavy Duty Hinge VX 7729/160 for unrebated doors with timber, steel or aluminium frames with three-dimensionally adjustable receivers. Size 160 mm, knuckle diameter 22.5 mm, usable DIN right and left handed.

SIMONSWERK V0037WF/V8000WF/V8610

(Rebated Hingle)

LOAD CAPACITY	MATERIAL	CODE
80 kg	Chrome	AKS.MNT.00096.CH
	Polished Brass	AKS.MNT.00096.PB
	Stainless Steel	AKS.MNT.00096.SS

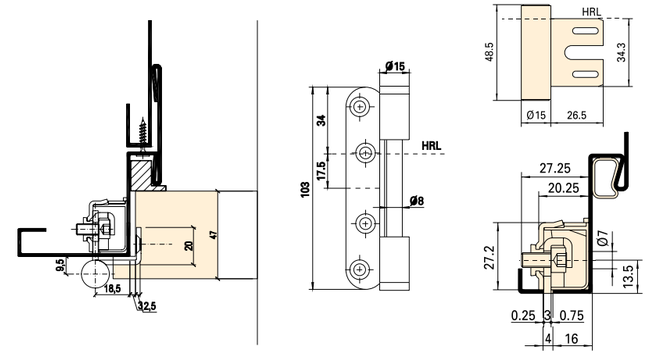

GENERAL FEATURES

Simonswerk hinge V0037WF for rebated doors with steel frames with receiver. CE-certified, load capacity 80 kg, knuckle length 103 mm, knuckle diameter 15 mm, right hand and left hand applicable.

SIMONSWERK V0087WF/V8000WF/V8610

(Unrebated Hingle)

LOAD CAPACITY	MATERIAL	CODE
70 kg	Chrome	AKS.MNT.00090.CH
	Polished Brass	AKS.MNT.00090.PB
	Stainless Steel	AKS.MNT.00090.SS

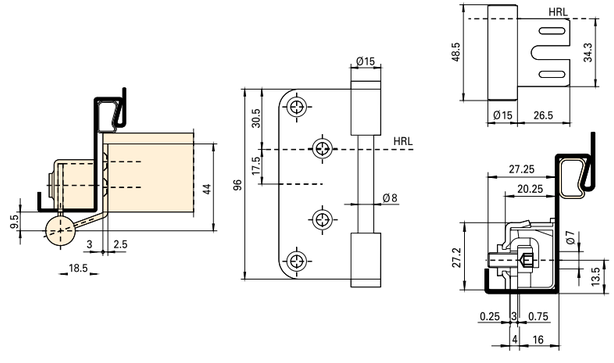

GENERAL FEATURES

Simonswerk hinge V0087WF for rebated doors with steel frames with receiver. CE-certified, load capacity 70 kg, knuckle length 96 mm, knuckle diameter 15 mm, right hand and left hand applicable.

SIMONSWERK TECTUS TE540 3D

(Concealed Hinge)

LOAD CAPACITY	MATERIAL	CODE
120 kg	Chrome	AKS.MNT.00089.CH
	Stainless Steel	AKS.MNT.00089.SS

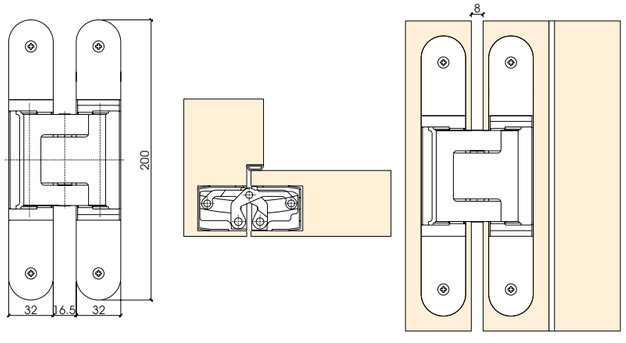

GENERAL FEATURES

Simonswerk TE 540 3D Hinge. Completely concealed for unrebated and rebated flush doors with wood, steel and aluminium frames. Load capacity 120 kg, three-dimensionally adjustable, right hand and left hand applicable.

SIMONSWERK TECTUS TE340 3D

(Concealed Hinge)

LOAD CAPACITY	MATERIAL	CODE
80 kg	Chrome	AKS.MNT.00048.CH
	Stainless Steel	AKS.MNT.00048.SS

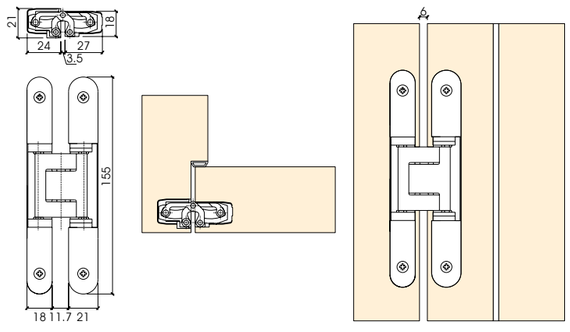

GENERAL FEATURES

Simonswerk TE 340 3D Hinge. Completely concealed for unrebated and rebated flush doors with wood, steel and aluminium frames. Load capacity 80 kg, three-dimensionally adjustable, right hand and left hand applicable.

DORMA - SHH301

(Glass Door Hinge)

LOAD CAPACITY	MATERIAL	CODE
100 kg	Chrome	AKS.MNT.00093.CH
	Polished Brass	AKS.MNT.00093.PB
	Stainless Steel	AKS.MNT.00093.SS

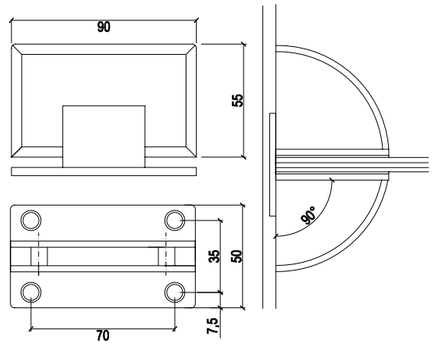

GENERAL FEATURES

Dorma SHH-301 two leaf wall mounted glass hinges can be opened to both sides and is suitable to use with 8-10 mm glass.

DORMA - SHH303

(Glass Door Hinge)

LOAD CAPACITY	MATERIAL	CODE
100 kg	Chrome	AKS.MNT.00094.CH
	Polished Brass	AKS.MNT.00094.PB
	Stainless Steel	AKS.MNT.00094.SS

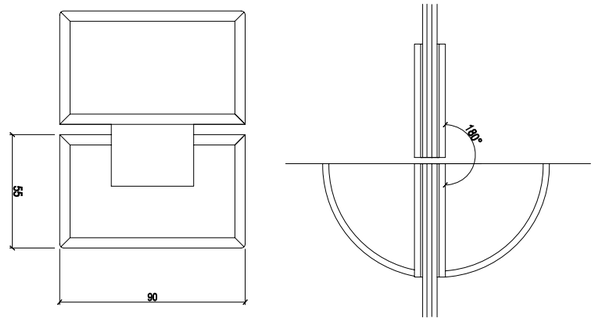

GENERAL FEATURES

Dorma SHH-303 glass to glass mounted hinges can be opened to both sides and is suitable to use with 8-10 mm glass.

DORMA - SHH305

(Glass Door Hinge)

LOAD CAPACITY	MATERIAL	CODE
100 kg	Chrome	AKS.MNT.00095.CH
	Polished Brass	AKS.MNT.00095.PB
	Stainless Steel	AKS.MNT.00095.SS

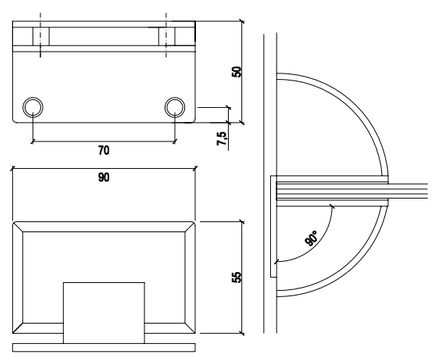

GENERAL FEATURES

Dorma SHH-305 one leaf wall mounted glass hinges can be opened to both sides and is suitable to use with 8-10 mm glass.

DOOR CLOSERS

www.dafadoor.com

DORMA TS 83

(Door Closer with Projecting Arm) **AKS.HDR.00015**

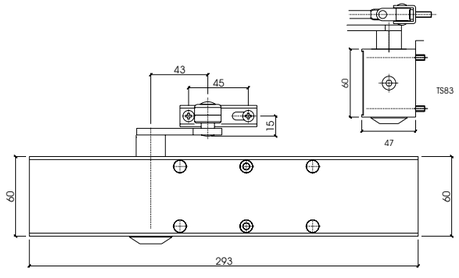

GENERAL FEATURES

Dorma TS 83 door closer with projecting arm has been tested and approved to EN 1154. The closer provides an adjustable EN 3-6 and EN 7 closing force. The EN 3-6 may be used up to 1400 mm door width and EN 7 may be used up to 1600 mm door width.

DORMA TS 92

(Cam Action Door Closer) **AKS.HDR.00009**

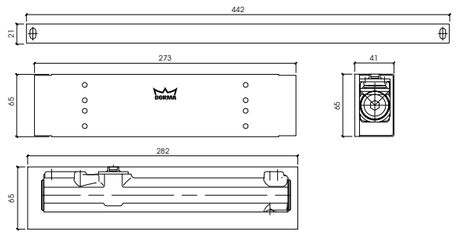

GENERAL FEATURES

Dorma TS 92 cam action door closers tested according to EN 1154,provide an EN 2-4 adjustable closing force. It may be used up to 1100 mm door width and has a 130 kg load capacity with its slide channel arm assembly.

GEZE TS 3000

(Cam Action Door Closer) **AKS.HDR.00016**

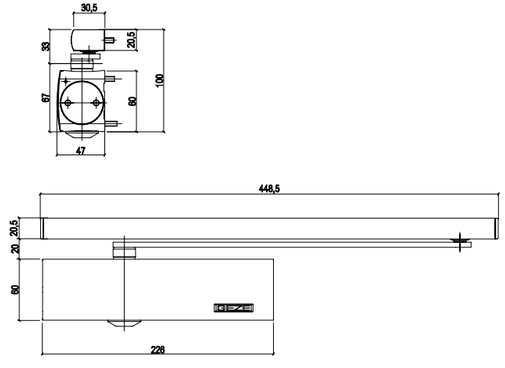

GENERAL FEATURES

Geze TS3000V door closers ensure EN 1154 norm and CE certificate. It provides an EN 1-4 closing force with its slide arm. The closing speed is also adjustable.

GEZE TS 5000

(Cam Action Door Closer) **AKS.HDR.00003**

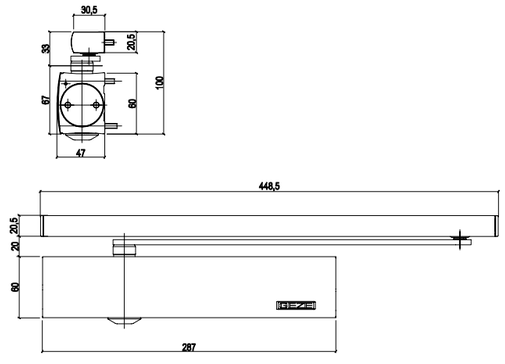

GENERAL FEATURES

Surface mounted door closer with guide rail arm for doors up to 1400mm wide, with EN 2-6 adjustable closing force, optical strength indicator, back check, hydraulic latching action. It ensures EN 1154 norm.

BRITON 2003 T

(Cam Action Door Closer) **AKS.HDR.00017**

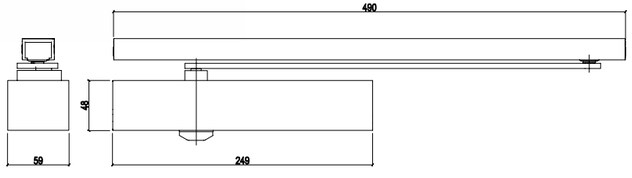

GENERAL FEATURES

Briton 2003T is a fixed strength (EN 3) track arm door closer.. The 2003T is tested to all requirements of EN 1154 and EN 1634, is Certifire approved and CE marked.

BRITON 2004

(Cam Action Door Closer) **AKS.HDR.00008**

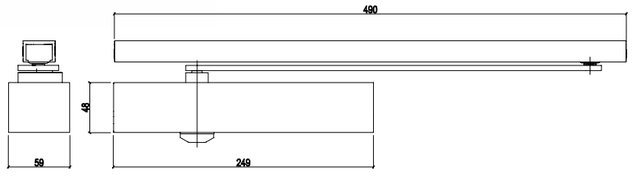

GENERAL FEATURES

Briton 2004 Door Closers with regular arm comes with a fixed power size 4. Briton conforms to BS EN 1154 and suitable for doors up to 1100mm wide and 80kg weight

GEZE BOXER EN 2-4

(Concealed Cam Action Door Closer) **AKS.HDR.00011**

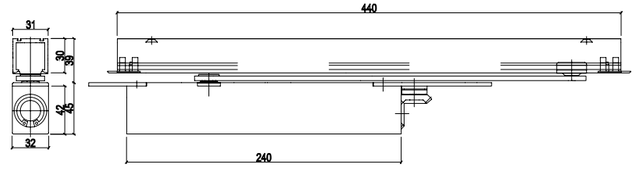

GENERAL FEATURES

An integrated (fully concealed) door closer available in single or double action and optional mechanical or electro hold-open. Power size 2-4 (EN 1154) suitable for doors with a leaf minimum thickness of 40mm, maximum weight of 130kg and maximum leaf width of 1100mm.

GEZE BOXER EN 3-6

(Concealed Cam Action Door Closer) **AKS.HDR.00018**

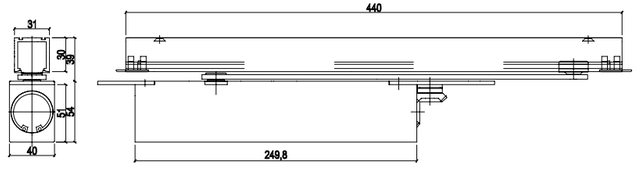

GENERAL FEATURES

An integrated (fully concealed) door closer available in single or double action and optional mechanical or electro hold-open. Power size 3-6 (EN 1154) suitable for doors with a leaf minimum thickness of 50mm, maximum weight of 180kg and leaf width of no greater than 1400mm..

DORMA ITS 96 EN 2-4

(Concealed Cam Action Door Closer) **AKS.HDR.00001**

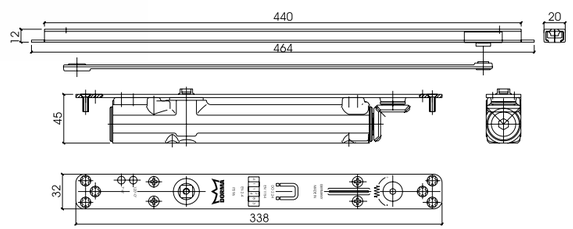

DORMA ITS 96 EN 3-6

(Concealed Cam Action Door Closer) **AKS.HDR.00002**

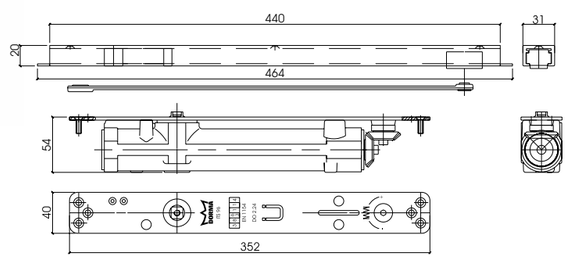

GENERAL FEATURES

Dorma ITS 96 concealed cam action door closers ensure EN 1154 norm. It provides EN 2-4 closing force with maximum 1100 mm door width and 100 kg. maximum door weight, EN 3-6 closing force with maximum 1400 mm door width and 180 kg. maximum door weight.

LOCKS

www.dafadoor.com

INGERSOLL RAND 5410

(Cylinder Deadlock)

MATERIAL	CODE
Chrome	AKS.KLT.00103.CH
Stainless Steel	AKS.KLT.00103.SS
Polished Brass	AKS.KLT.00103.PB

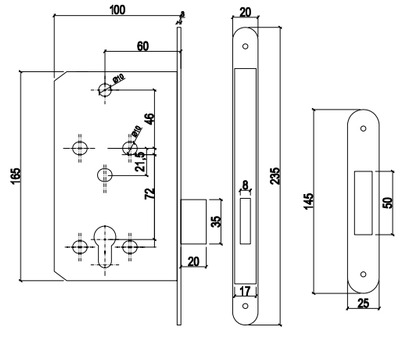

GENERAL FEATURES

Ingersoll Rand 5410 cylinder deadlock conforms to the requirements of EN 12209, dimensional co-ordination across the range to DIN 18251 and CE marked. The deadbolt can be thrown and withdrawn from one side or from both as required depending on the cylinder selected.

KALE 151 R

(Room Lock)

MATERIAL	CODE
Chrome	AKS.KLT.00031.CH
Polished Brass	AKS.KLT.00031.PB

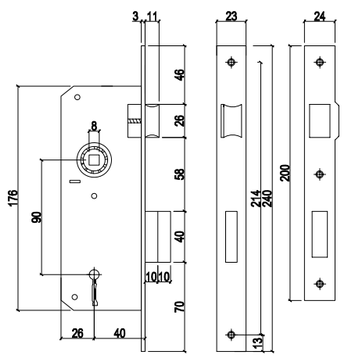

GENERAL FEATURES

Kale 151 R, interior mortise lock for wooden doors, with ball bearing offers 2 different forend and striking plate colour options.

INGERSOLL RAND 5420

(Cylinder Sashlock)

MATERIAL	CODE
Chrome	AKS.KLT.00041.CH
Stainless Steel	AKS.KLT.00034.SS
Polished Brass	AKS.KLT.00034.PB

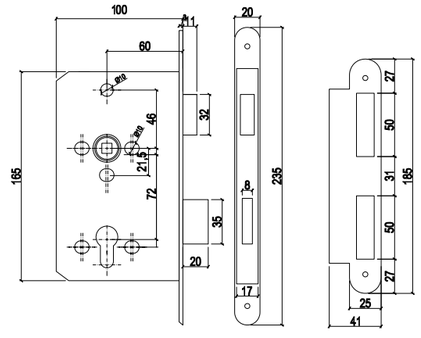

GENERAL FEATURES

Ingersoll Rand 5420 cylinder sashlock conforms to the requirements of EN 12209, dimensional co-ordination across the range to DIN 18251 and CE marked. The lock can be operated by lever handles to withdraw the latchbolt. The deadbolt can be thrown and withdrawn from one or both sides as required depending on the cylinder selected. The cylinder to latch function will operate both deadbolt and latch.

KALE 152-60

(Cylinder Sashlock)

MATERIAL	CODE
Chrome	AKS.KLT.00012.CH
Polished Brass	AKS.KLT.00012.PB

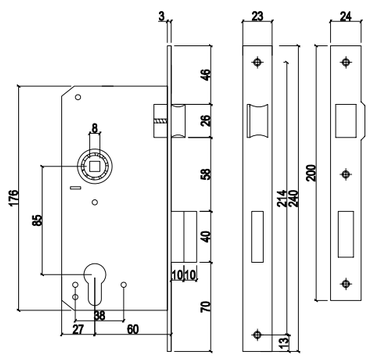

GENERAL FEATURES

Kale 152 R, mortise lock with cylinder for wooden doors, with ball bearing offers 2 different forend and striking plate colour options.

INGERSOLL RAND 5430

(Bathroom Lock)

MATERIAL	CODE
Chrome	AKS.KLT.00032.CH
Stainless Steel	AKS.KLT.00035.SS
Polished Brass	AKS.KLT.00035.PB

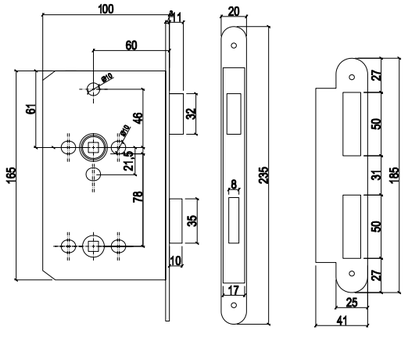

GENERAL FEATURES

Ingersoll Rand 5430 bathroom lock conforms to the requirements of EN 12209, dimensional co-ordination across the range to DIN 18251 and CE marked. From both sides the lock can be operated by lever handle to withdraw the latchbolt.The 10mm throw deadbolt is operated from inside by a single turn of a thumbturn. The outside of the door can be fitted with an indicator and emergency release and operates in conjunction with the thumbturn via an 8mm spindle.

INGERSOLL RAND 5440

(Latch Lock)

MATERIAL	CODE
Chrome	AKS.KLT.00104.CH
Stainless Steel	AKS.KLT.00104.SS
Polished Brass	AKS.KLT.00104.PB

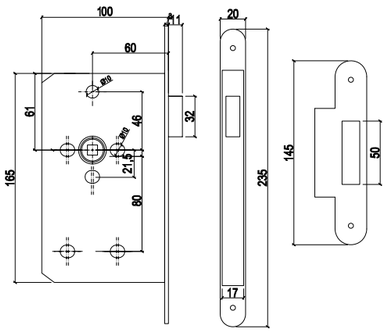

GENERAL FEATURES

Ingersoll Rand 5440 latch lock conforms to the requirements of EN 12209, dimensional co-ordination across the range to DIN 18251 and CE marked.From both sides the lock can be operated by lever handle to withdraw the latchbolt at all times.

KALE 169 R

(Bathroom Lock)

MATERIAL	CODE
Chrome	AKS.KLT.00018.CH
Polished Brass	AKS.KLT.00018.PB

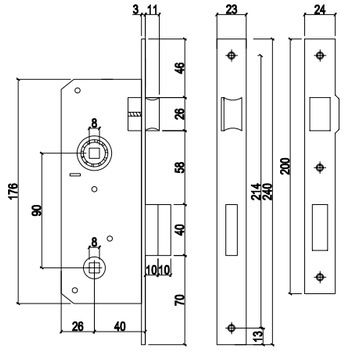

GENERAL FEATURES

Kale 169 R, interior mortise lock for wooden wc, bathroom doors with ball bearing offers 2 different forend and striking plate colour options.

INGERSOLL RAND 5560

(Panic Lock)

MATERIAL	CODE
Chrome	AKS.KLT.00053.CH
Stainless Steel	AKS.KLT.00053.SS
Polished Brass	AKS.KLT.00053.PB

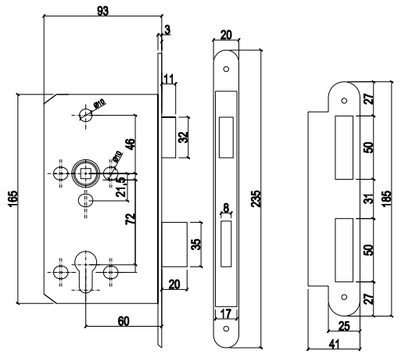

GENERAL FEATURES

Briton 5560 Escape Sashlock, conforms to EN 12209 and EN 179 and assessed to BS 476 part 22 for a fire test. Briton 5560 is also succesful in fire test to EN 1634 on timber and steel doors. The deadbolt can be thrown and withdrawn from one or both sides depending on the cylinder selected.From inside a half set of levers will withdraw the deadbolt and latchbolt simultaneously.

KALE 154-40

(Swing Door Lock)

MATERIAL	CODE
Chrome	AKS.KLT.00011.CH
Polished Brass	AKS.KLT.00011.PB

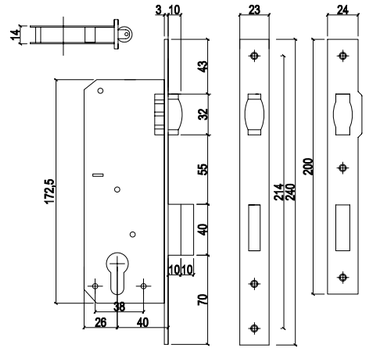

GENERAL FEATURES

Kale 154, mortise lock with cylinder for timber and aluminium swing doors conforms to TS EN 12209 and offers 2 different forend and striking plate color options.

HAFELE 911.24.008 - 009

(Swing Door Lock)

MATERIAL	CODE
Stainless Steel	AKS.KLT.00110.SS
Polished Brass	AKS.KLT.00110.PB

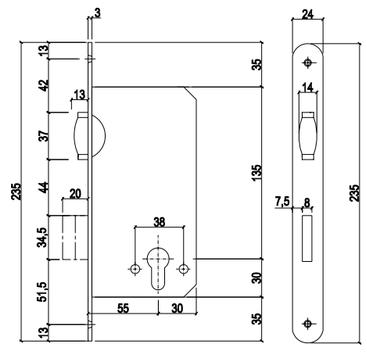

GENERAL FEATURES

Hafele 911.24.008-009, may be used for flush wooden doors. It provides 2 turns deadbolt and adjustable roller latch between 3-9 mm.

KALE 201-40

(Sliding Door Lock)

MATERIAL	CODE
Chrome	AKS.KLT.00108

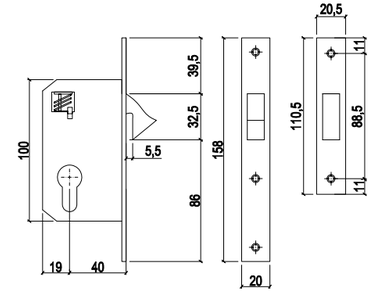

GENERAL FEATURES

Kale 201-40, mortise lock with cylinder for sliding doors conforms to TS EN 12209. It provides one throw with chrome plated zinc alloy deadbolt

HAFELE 911.26.330

(Sliding Door Lock)

MATERIAL	CODE
Stainless Steel	AKS.KLT.00109

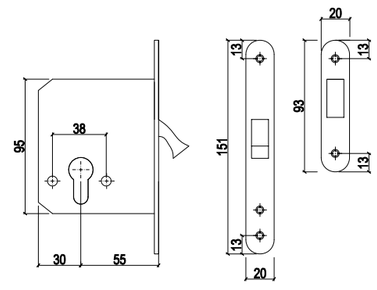

GENERAL FEATURES

Hafele 911.26.330, may be used for sliding wooden doors with profile cylinder.

KALE 256

(Multisystem Lock)

MATERIAL	CODE
Chrome	AKS.KLT.00107

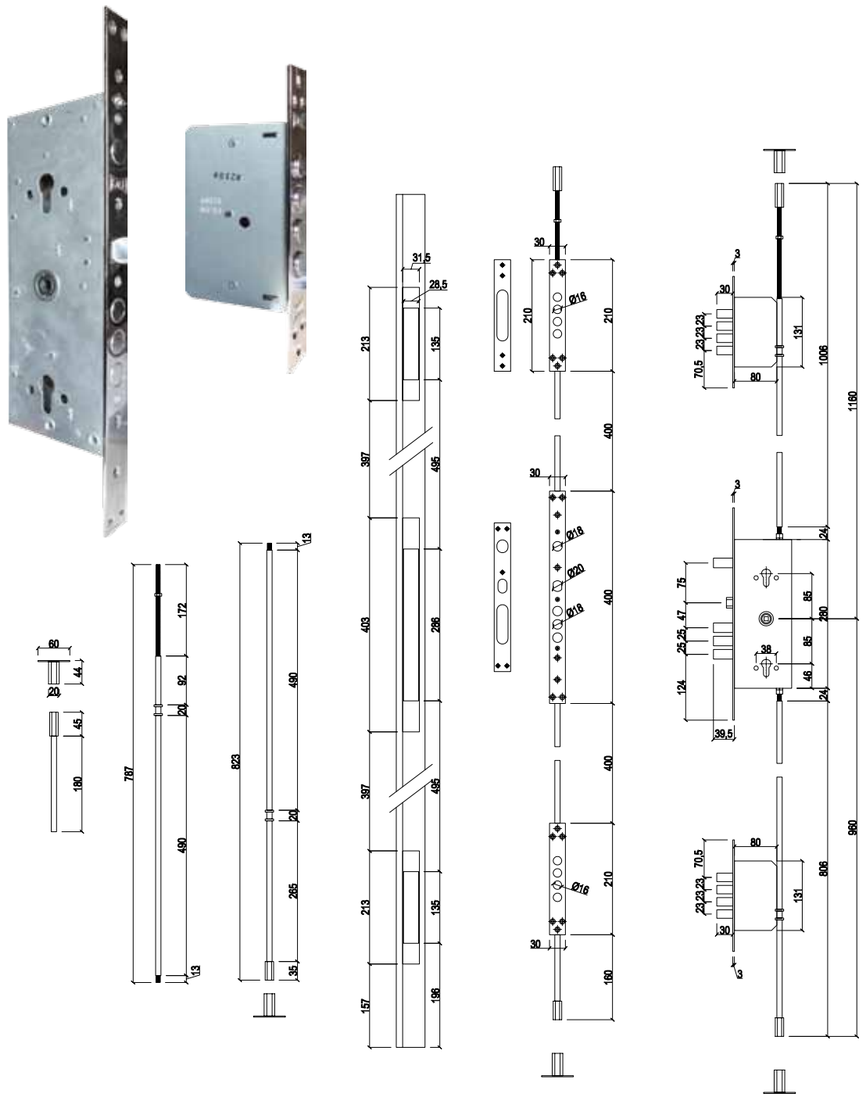

GENERAL FEATURES

Kale 256, multi point locking system with ball bearing conforms to TS 179 norm. It provides chrome plated steel forend and striking plate. Forend plate is removable for an easy assembly. The rose is hardened steel for anti drill resistance.

KNOB LOCK

	PASAJ TYPE	OFFICE TYPE	WC TYPE
Stainless Steel	AKS.KLT.00113	AKS.KLT.00114	AKS.KLT.00115

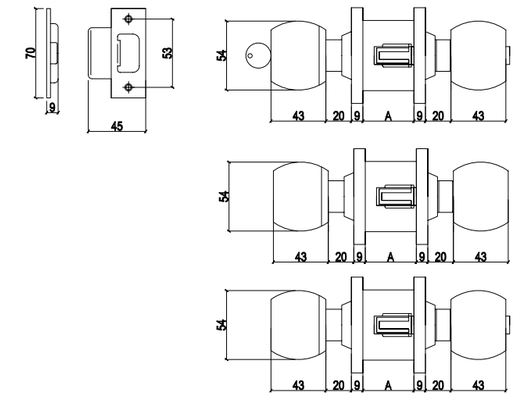

GENERAL FEATURES

Hafele knob lock is used for unrebated timber and metal doors. It provides three types for different usage types. Passage type, where the knob does not provide any locking feature. WC type, where the knob allows locking from inside with pushing the turnbutton on the knob and opening from interior only. In case of emergency the knob is opened by a coin or screwdriver from outside. Office type, it is accessed form both sides except the door is locked with the key. Passage knob locks operate according to ANSI F76, WC types according to the ANSI F76 and office types according to ANSI F84 norms.

HAFELE 911.14.001

(Radiation Lock)

MATERIAL	CODE
Stainless Steel	AKS.KLT.00112

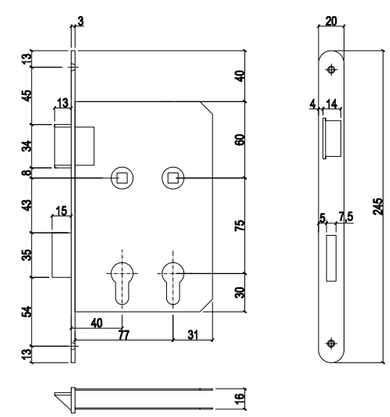

GENERAL FEATURES

Hafele 911.14.001 lock is used in radioactive resistant doors,test and surgery room doors. Two half cylinders and handles on the lock are used to prevent any sound and radioactive beam to pass through sides.

DORMA - ARCOS US 10

(Glass Door Lock)

CODE
AKS.KLT.00105

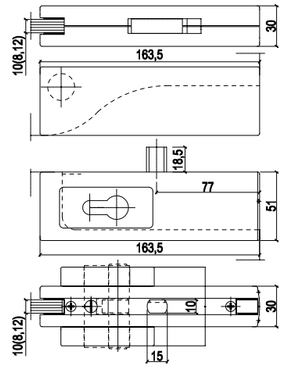

GENERAL FEATURES

Dorma universal corner lock US 10 is used on glass doors and allows to lock the door on the striking plate. 8,10 and 12 mm glass thicknesses are suitable to use with the lock.

DORMA - ARCOS GK 50 / US 20

(Glass Door Lock and Striking Plate)

CODE
AKS.KLT.00106

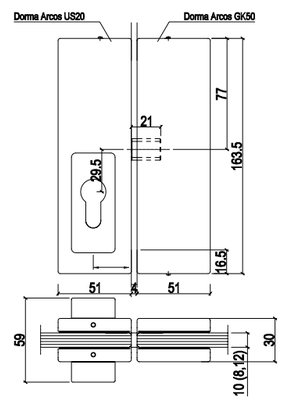

GENERAL FEATURES

Dorma Arcos US 20 centre lock and GK 50 strike box are used to lock the glass door on another glass partition. Dorma Arcos US 20 is also used individually with a striking plate to lock the glass door on an timber and metal frame.

DOOR HANDLE

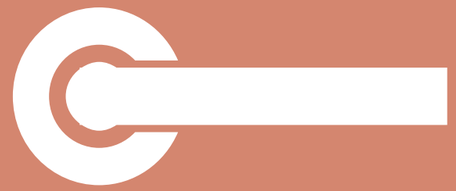

www.dafadoor.com

BRASSCO - ARTE

	Chrome	Polished Brass	Satin Nickel
ROOM TYPE	KOL.00099.CH	KOL.00099.PB	KOL.00099.SN
CYLINDER	KOL.00100.CH	KOL.00100.PB	KOL.00100.SN
WC TYPE	KOL.00101.CH	KOL.00101.PB	KOL.00101.SN

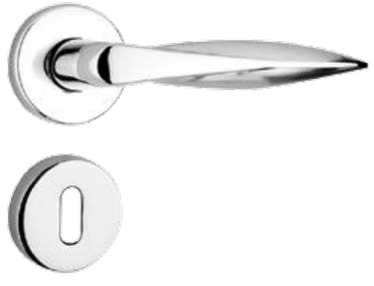

BRASSCO - AXIS

	Chrome	Polished Brass	Satin Nickel
ROOM TYPE	KOL.00102.CH	KOL.00102.PB	KOL.00102.SN
CYLINDER	KOL.00103.CH	KOL.00103.PB	KOL.00103.SN
WC TYPE	KOL.00104.CH	KOL.00104.PB	KOL.00104.SN

BRASSCO - COLOMBO

	Chrome	Polished Brass	Satin Nickel
ROOM TYPE	KOL.00105.SC	KOL.00105.PB	KOL.00105.SN
CYLINDER	KOL.00106.SC	KOL.00106.PB	KOL.00106.SN
WC TYPE	KOL.00107.SC	KOL.00107.PB	KOL.00107.SN

BRASSCO - FLEXA

	Chrome	Satin Nickel
ROOM TYPE	KOL.00108.CH	KOL.00108.SN
CYLINDER	KOL.00109.CH	KOL.00109.SN
WC TYPE	KOL.00110.CH	KOL.00110.SN

BRASSCO - FLORA

	Bright Antique	Satin Antique	Polished Brass
ROOM TYPE	KOL.00111.AA	KOL.00111.SA	KOL.00111.PB
CYLINDER	KOL.00112.AA	KOL.00112.SA	KOL.00113.SA
WC TYPE	KOL.00111.PB	KOL.00112.PB	KOL.00113.BP

BRASSCO - LEXUS

	Chrome	Polished Brass	Stainless Steel
ROOM TYPE	KOL.00061.CH	KOL.00061.PB	KOL.00061.SS
CYLINDER	KOL.00062.CH	KOL.00062.PB	KOL.00063.PB
WC TYPE	KOL.00061.SS	KOL.00062.SS	KOL.00063.SS

BRASSCO - OVAL

	Chrome	Satin Chrome	Satin Nickel
ROOM TYPE	KOL.00114.CH	KOL.00114.SC	KOL.00114.SN
CYLINDER	KOL.00115.CH	KOL.00115.SC	KOL.00115.SN
WC TYPE	KOL.00116.CH	KOL.00116..SC	KOL.00116.SN

BRASSCO - OFFICE

	Chrome	Satin Chrome
ROOM TYPE	KOL.00117.CH	KOL.00117.SC
CYLINDER	KOL.00118.CH	KOL.00118.SC
WC TYPE	KOL.00119.CH	KOL.00119.SC

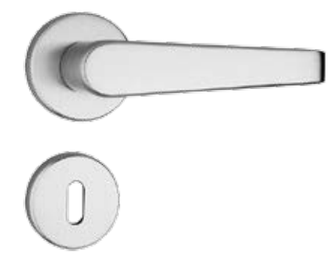

BRASSCO - TERRA

	Chrome	Satin Chrome	Satin Nickel
ROOM TYPE	KOL.00120.CH	KOL.00120.SC	KOL.00120.SN
CYLINDER	KOL.00121.CH	KOL.00121.SC	KOL.00121.SN
WC TYPE	KOL.00122.CH	KOL.00122.SC	KOL.00122.SN

DORMA - PURE 8100

	Stainless Steel
CYLINDER TYPE	KOL.00026
WC TYPE	KOL.00049

DORMA - PURE 8906

	Stainless Steel
ROOM TYPE	KOL.0005725
CYLINDER	KOL.00025
WC TYPE	KOL.00056

HOPPE - PARIS 138L

	Aluminium
ROOM TYPE	KOL.00094
CYLINDER	KOL.00096
WC TYPE	KOL.00095

HOPPE - K138/202K

	BLACK MATT
CYLINDER TYPE	KOL.00097
CYLINDER 1/2	KOL.00098

HOPPE - K58-202K-138

	Code
CYLINDER	KOL.00123

HOPPE - AMSTERDAM

	Stainless Steel
ROOM TYPE	KOL.00136
CYLINDER	KOL.00135
WC TYPE	KOL.00137

HOPPE - VITORIA

	Silver Eloxal Aluminium
ROOM TYPE	KOL.00126
CYLINDER	KOL.00127
WC TYPE	KOL.00128

HOPPE - NEW YORK

	Silver Eloxal Aluminium
ROOM TYPE	KOL.00142
CYLINDER	KOL.00141
WC TYPE	KOL.00143

HOPPE - BIRMINGHAM

	Silver Eloxal Aluminium
ROOM TYPE	KOL.00130
CYLINDER	KOL.00129
WC TYPE	KOL.00131

HOPPE - LUCCA M1955/17K/17KS

	Polished / Satin Chrome
ROOM TYPE	KOL.00133
CYLINDER	KOL.00132
WC TYPE	KOL.00134

HOPPE - HCS A113 / LONDON

	Silver Eloxal
ROOM TYPE	KOL.00145
CYLINDER	KOL.00144
WC TYPE	KOL.00146

HOPPE - DALLAS

	Stainless Steel
ROOM TYPE	KOL.00139
CYLINDER	KOL.00138
WC TYPE	KOL.00140

HOPPE - HCS A 1530 / ATLANTA

	Silver Eloxal
PASSAGE TYPE	KOL.00147
NON KEYED LOCKING TYPE	KOL.00148
KEYED LOCKING TYPE	KOL.00149

DAFADOOR

	Stainles Steel	Polished Brass	Aluminium
CYLINDER	KOL.00159.SS	KOL.00159.PB	KOL.00159.AL
WC TYPE	KOL.00159.SS	KOL.00159.PB	KOL.00159.AL

FSB - 1078

	Stainles Steel	Polished Brass	Aluminium
CYLINDER	KOL.00155.SS	KOL.00155.PB	KOL.00155.AL
WC TYPE	KOL.00156.SS	KOL.00156.PB	KOL.00156.AL

FSB - 1003

	Stainles Steel	Polished Brass	Aluminium
CYLINDER	KOL.00153.SS	KOL.00153.PB	KOL.00153.AL
WC TYPE	KOL.00154.SS	KOL.00154.PB	KOL.00154.AL

FSB - 7655

	Stainles Steel	Aluminium
CYLINDER	KOL.00161.SS	KOL.00161.AL

FSB - 7949 / 7950

	Stainles Steel
CYLINDER (23,5x20 cm)	KOL.00162
CYLINDER (20,7x23 cm)	KOL.00163

7949 7950

FSB - 1486 / 1488

	Stainles Steel	Aluminium
CYLINDER	KOL.00164.SS	KOL.00164.AL
WC TYPE	KOL.00165.SS	KOL.00165.AL

1486 1488

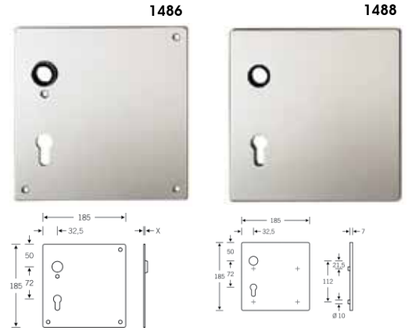

FSB - 4255

	Stainles Steel	Aluminium
WC TYPE	KOL.00166.SS	KOL.00166.AL

FSB - 4205

	Aluminium
CYLINDER/WC (19,5x7 cm)	KOL.00167

FSB - 4203

	Aluminium
WC TYPE (9x9)	KOL.00168

FSB - 1064

	Aluminium (Black)
CYLINDER	KOL.00169
WC TYPE	KOL.00170

PUSH PLATE
PULL HANDLE
KICK PLATE
DOOR VIEWER
GRILL
FLUSH BOLT

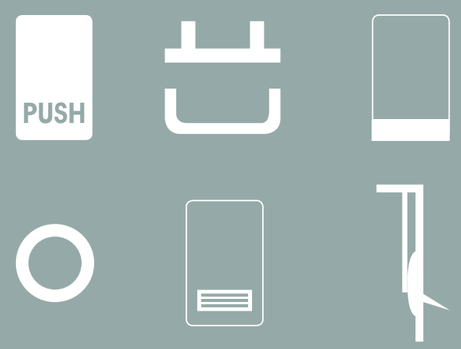

www.toobtab.com

AUTOMATIC DOOR SEAL
CYLINDER
DOOR STOP
PANIC BAR
SLIDING DOOR MECHANIZM
SECURITY LATCH

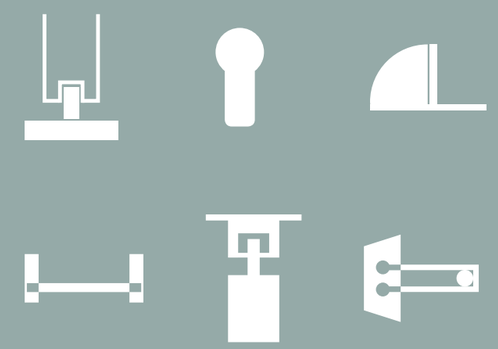

www.dafadoor.com

PUSH

DAFADOOR

(Push Plate)

	Stainless Steel	Aluminium	Polished Brass
10x30 cm	KOL.00150.SS	KOL.00150.AL	KOL.00150.PB
10x40 cm	KOL.00151.SS	KOL.00151.AL	KOL.00151.PB
10x45 cm	KOL.00152.SS	KOL.00152.AL	KOL.00152.PB

GENERAL FEATURES

Dafadoor push plates are used on timber, aluminium and metal swing doors and offers three dimension and three color options. The 1,2 mm thick push plate is mounted on the surface with the four screws on the push plate.

PUSH

DAFADOOR

(Push Plate)

		MODEL A	MODEL B
10x30 cm	Stainless Steel	KOL.00064	KOL.00067
10x40 cm	Stainless Steel	KOL.00065	KOL.00068
10x45 cm	Stainless Steel	KOL.00066	KOL.00069

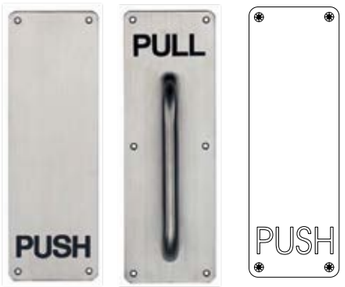

MODEL A

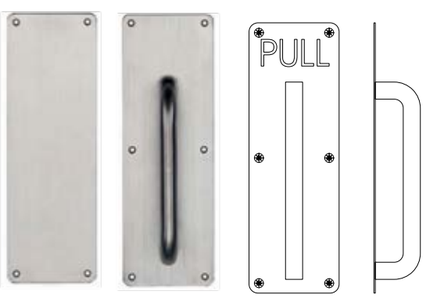

MODEL B

GENERAL FEATURES

Hafele push plates are used on timber,aluminium and metal swing doors and offer two model and three dimension options.

DAFADOOR

(Pull Handle)

	Stainless Steel	Aluminium	Polished Brass
38,2x35 cm	KOL.00070.SS	KOL.00070.AL	KOL.00070.PB
53,2x50 cm	KOL.00071.SS	KOL.00071.AL	KOL.00071.PB
73,2x70 cm	KOL.00072.SS	KOL.00072.AL	KOL.00072.PB

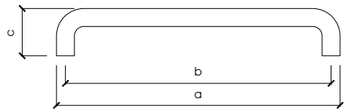

GENERAL FEATURES

Dafadoor pull handles are suitable for heavy duty usages. The handle offers three finish and three dimension options.

DAFADOOR

(Pull Handle)

	Stainless Steel	Aluminium	Polished Brass
40x20 cm	KOL.00073.SS	KOL.00073.AL	KOL.00073.PB
50x30 cm	KOL.00074.SS	KOL.00074.AL	KOL.00074.PB
70x50 cm	KOL.00075.SS	KOL.00075.AL	KOL.00075.PB

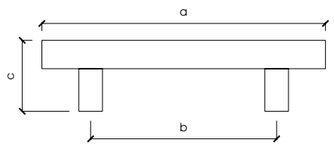

GENERAL FEATURES

Dafadoor pull handles are suitable for heavy duty usages. The handle offers three finish and three dimension options.

DAFADOOR

(Pull Handle)

	OAK	Stainless Steel	Aluminium	Polished Brass
	120x100 cm	KOL.00077.O.SS	KOL.00077 .O.AL	KOL.00077.O.PB
	140x120 cm	KOL.00078.O.SS	KOL.00078 .O.AL	KOL.00078.O.PB

Wood

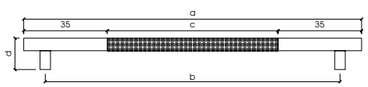

SAPELLI	Stainless Steel	Aluminium	Polished Brass
120x100 cm	KOL.00077.S.SS	KOL.00077.S.AL	KOL.00077.S.PB
140x120 cm	KOL.00078.S.SS	KOL.00078.S.AL	KOL.00078.S.PB

GENERAL FEATURES

Dafadoor pull handle with a wooden surface on the middle allows a comfortable usage for both daily and heavy duty usage. The handle provides two wooden surfaces (oak and sapelli) and different finishes such as stainless steel, aluminium and polished brass.

FSB - 4254

(Pull Handle)

Stainles Steel	Aluminium

FSB - 4253

(Pull Handle)

Stainles Steel	Aluminium

DORMA - TG 9355

(Pull Handle)

	Stainless Steel
38,2x35 cm	KOL.00079
53,2x50 cm	KOL.00080
73,2x70 cm	KOL.00081

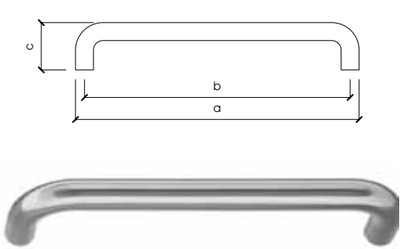

DORMA - TG 9387

(Pull Handle)

	Stainless Steel
40X20 cm	KOL.00082
50X30 cm	KOL.00083
70X50 cm	KOL.00084

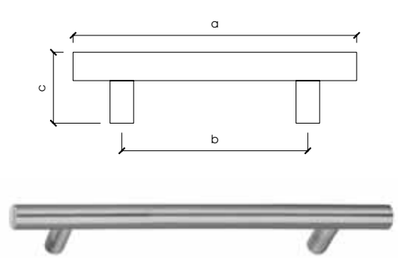

HAFELE - BODO

(Pull Handle)

	Stainless Steel
24,4x22,5 cm	KOL.00085
31,9x30 cm	KOL.00086

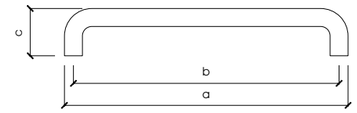

GENERAL FEATURES

HAFELE - GEORG

(Pull Handle)

	Stainless Steel
33x30 cm	KOL.00087
38x35 cm	KOL.00088

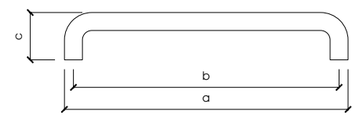

GENERAL FEATURES

HAFELE - STEVEN

(Pull Handle)

	Stainless Steel
30x20 cm	KOL.00089
50x30 cm	KOL.00090
80x60 cm	KOL.00091
120x100 cm	KOL.00092
160x140 cm	KOL.00093

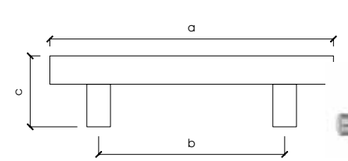

GENERAL FEATURES

DAFADOOR

(Kick Plate)

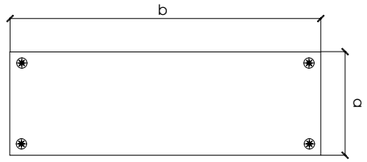

	Stainless Steel	Aluminium	Polished Brass
10x70 cm	AKS.TKM.00001.SS	AKS.TKM.00001.AL	AKS.TKM.00001.PB
10x80 cm	AKS.TKM.00002.SS	AKS.TKM.00002.AL	AKS.TKM.00002.PB
10x90 cm	AKS.TKM.00003.SS	AKS.TKM.00003.AL	AKS.TKM.00003.PB
22x70 cm	AKS.TKM.00004.SS	AKS.TKM.00004.AL	AKS.TKM.00004.PB
22x80 cm	AKS.TKM.00005.SS	AKS.TKM.00005.AL	AKS.TKM.00005.PB
22x90 cm	AKS.TKM.00006.SS	AKS.TKM.00006.AL	AKS.TKM.00006.PB
92x86 cm	AKS.TKM.00007.SS	AKS.TKM.00007.AL	AKS.TKM.00007.PB

GENERAL FEATURES

Dafadoor kick plates are used commonly on hospital, school, public and service doors. The 1,2 mm thick kick plate offers numerous dimension and three finish options. It is mounted on the surface with four screws on the kick plate.

DAFADOOR

(Kick Plate)

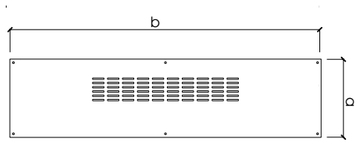

	Stainless Steel	Aluminium	Polished Brass
10x70 cm	AKS.TKMM.00001.SS	AKS.TKMM.00001.AL	AKS.TKMM.00001.PB
10x80 cm	AKS.TKMM.00002.SS	AKS.TKMM.00002.AL	AKS.TKMM.00002.PB
10x90 cm	AKS.TKMM.00003.SS	AKS.TKMM.00003.AL	AKS.TKMM.00003.PB
22x70 cm	AKS.TKMM.00004.SS	AKS.TKMM.00004.AL	AKS.TKMM.00004.PB
22x80 cm	AKS.TKMM.00005.SS	AKS.TKMM.00005.AL	AKS.TKMM.00005.PB
22x90 cm	AKS.TKMM.00006.SS	AKS.TKMM.00006.AL	AKS.TKMM.00006.PB
92x86 cm	AKS.TKMM.00007.SS	AKS.TKMM.00007.AL	AKS.TKMM.00007.PB

GENERAL FEATURES

Dafadoor kick plates with grill allow air entrance through the door and commonly used on bathroom and WC doors. The 1,2 mm thick kick plate offers numerous dimension and three finish options. It is mounted on the surface with four screwson the kick plate.

DAFADOOR

(Kick Plate)

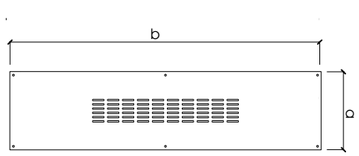

	Stainless Steel	Aluminium	Polished Brass
10x70 cm	AKS.TKMM.00008.SS	AKS.TKMM.00008.AL	AKS.TKMM.00008.PB
10x80 cm	AKS.TKMM.00009.SS	AKS.TKMM.00009.AL	AKS.TKMM.00009.PB
10x90 cm	AKS.TKMM.00010.SS	AKS.TKMM.00010.AL	AKS.TKMM.00010.PB
22x70 cm	AKS.TKMM.00011.SS	AKS.TKMM.00011.AL	AKS.TKMM.00011PB
22x80 cm	AKS.TKMM.00012.SS	AKS.TKMM.00012.AL	AKS.TKMM.00012.PB
22x90 cm	AKS.TKMM.00013.SS	AKS.TKMM.00013.AL	AKS.TKMM.00013.PB
92x86 cm	AKS.TKMM.00014.SS	AKS.TKMM.00014.AL	AKS.TKMM.00014.PB

GENERAL FEATURES

Dafadoor kick plates with grill allow air entrance through the door and commonly used on bathroom and WC doors. The 1,2 mm thick kick plate offers numerous dimension and three finish options. It is mounted on the surface with four screwson the kick plate.

DAFADOOR - 200°

(Door Viewer)

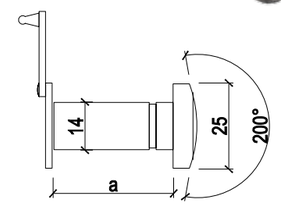

	LEAF THICKNESS	CODE
Stainless Steel	35-60mm	AKS.DRB.00001
Brass	35-60mm	AKS.DRB.00002

GENERAL FEATURES

Dafadoor spyglasses are used on timber and metal entrance doors. It offers 200 degrees of view angle and two finish options. It is suitable for leaf thicknesses 35-60 mm.

HAFELE 200°

(Door Viewer)

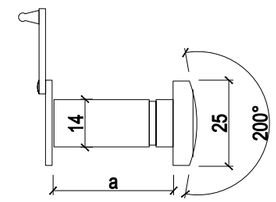

	LEAF THICKNESS	CODE
Nickel	35-55mm	AKS.DRB.00003
Brass	35-55mm	AKS.DRB.00004
Antique Brass	35-55mm	AKS.DRB.00005

GENERAL FEATURES

Hafele spyglasses are used on timber and metal entrance doors. It offers 200 degrees of view angle and two finish options. It is suitable for leaf thicknesses 35-55 mm.

HAFELE 200°

(Door Viewer)

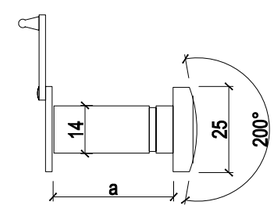

	LEAF THICKNESS	CODE
Nickel	50-80mm	AKS.DRB.00006
Brass	50-80mm	AKS.DRB.00007
Antique Brass	50-80mm	AKS.DRB.00008

GENERAL FEATURES

Hafele spyglasses are used on timber and metal entrance doors. It offers 200 degrees of view angle and three finish options. It is suitable for leaf thicknesses 50-80 mm.

HAFELE 200°

(Door Viewer Fire Rated)

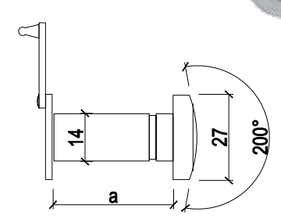

	LEAF THICKNESS	CODE
Nickel	35-60mm	AKS.DRB.00009
Brass	35-60mm	AKS.DRB.00010
Antique Brass	35-60mm	AKS.DRB.00011

GENERAL FEATURES

Hafele fire rated spyglasses are used on fire rated timber and metal entrance doors. It offers 200 degrees of view angle and three finish options. It is suitable for leaf thicknesses 50-80 mm and also provides 60 minutes fire rating.

DAFADOOR

(Door Louver)

	Stainless Steel	Aluminium	Polished Brass
55x11 cm	MENFZ.00002	MENFZ.00001	MENFZ.00003
80x22 cm	MENFZ.00004	MENFZ.00005	MENFZ.00006

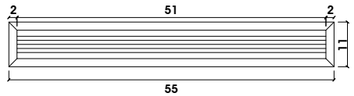

GENERAL FEATURES

Dafadoor door louver allows air entrance through the door and commonly used on bathroom and WC doors. The 2 mm thick louver offers two dimension and four finish options.

DAFADOOR

(Flush Bolt)

	Stainless Steel	Polished Brass
15 cm	AKS.SRG.00007	AKS.SRG.00009

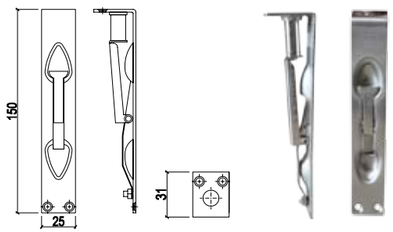

GENERAL FEATURES

Dafadoor 15 cm flush bolt is used on double leaf timber doors. It is mounted on the passive leaf and can be locked with the switch on the flushbolt which locks the bolt to the ground.

DAFADOOR

(Automatic Flush Bolt)

	Chrome	Polished Brass	Stainles Steel
Automatic Flush Bolt	AKS.SRG.00002	AKS.SRG.00006	AKS.SRG.00003

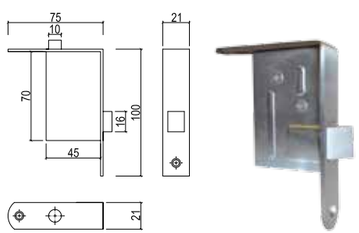

GENERAL FEATURES

Dafadoor automatic flush bolt is used on double leaf timber and metal doors. It is automatic that inactive door is latched when active door closes, bolts retract when active door is opened

INGERSOLL RAND

(Automatic Flush Bolt)

Stainless Steel
AKS.SRG.00010

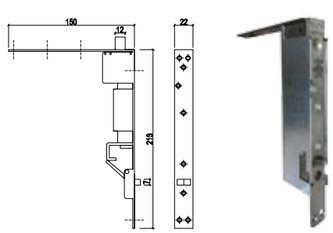

GENERAL FEATURES

Ingersoll Rand Automatic flush bolt is used on double leaf timber and metal doors. It is fully automatic that inactive door is latched when active door closes, bolts retract when active door is opened. Ingersoll Rand automatic flush bolts meet ANSI A156.3 Type 25.

DOMATIC

(Automatic Door Seal)

	CODE
60 cm	AKS.GYT.00011
80 cm	AKS.GYT.00008
100 cm	AKS.GYT.00007
120 cm	AKS.GYT.00010

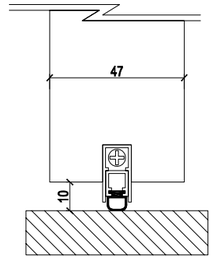

GENERAL FEATURES

Domatic door seals are suitable for timber, aluminium and PVC doors, equipped with plastic polyamide push button. It is used for sound isolation, wind control and smoke control. The product has been tested up to 1.000.000 cycles and its maximum travel is 10 mm.

LORIENT

(Automatic Door Seal)

	CODE
IS 8010si - 83,5 cm	AKS.GYT.00012
IS 8010si - 93,5 cm	AKS.GYT.00013
IS 8010si - 103,5 cm	AKS.GYT.00014

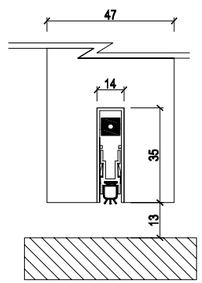

GENERAL FEATURES

Lorient IS8010si automatic door seal is tested for up to 60 minutes under the conditions of BS 476: Pt.20/22: 1987 and BS EN 1634-1: 2000. It also meets the smoke leakage performance requirements of BS 9999. Its acoustic performance is tested in accordance with BS EN ISO 140-3: 1995.

ATHMER

(Automatic Door Seal)

	CODE
63 cm	AKS.GYT.00015
73 cm	AKS.GYT.00016
83 cm	AKS.GYT.00017
93 cm	AKS.GYT.00018
103 cm	AKS.GYT.00019
113 cm	AKS.GYT.00020

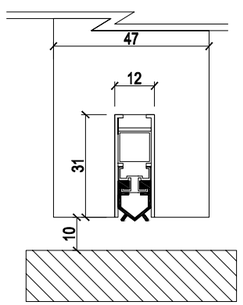

GENERAL FEATURES

Athmer door seals are used on acoustic doors and mounted under the door leaf. It is DIN left and right hand applicable.

KALE - 164 GNC

(Cylinder)

	Satin Nickel	Brass
164 GNC / 62	AKS.KLT.00051	AKS.KLT.00051.B
164 GNC / 68	AKS.KLT.00046	AKS.KLT.00046.B
164 GNC / 76	AKS.KLT.00094	AKS.KLT.00094.B
164 GNC / 80	AKS.KLT.00059	AKS.KLT.00059.B
164 GNC / 90	AKS.KLT.00017	AKS.KLT.00017.B

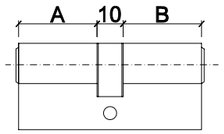

A	26	26	26	30	26	30	33	30	35	33	35	35	40	40	45
B	26	30	32	30	35	35	33	40	35	40	40	45	40	45	45
L	62	66	68	70	71	75	76	80	80	80	85	90	90	95	100

GENERAL FEATURES

Kale 164 GNC, standart cylinder with satin or brass case. Pins are profile formed MS 58 brass according to the TS EN 1303. The required dimension can be checked from the chart on the corner. Optional anti-drill resistant steel pin version on both sides.

KALE - 164 GR

(Cylinder)

	Satin Nickel	Brass
164 GR / 45	AKS.KLT.00052	AKS.KLT.00052.B
164 GR / 50	AKS.KLT.00100	AKS.KLT.00100.B
164 GR / 55	AKS.KLT.00101	AKS.KLT.00101.B
164 GR / 60	AKS.KLT.00102	AKS.KLT.00102.B

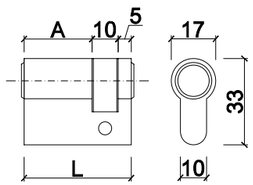

A	26	30	35	40	45	50
L	41	45	50	55	60	65

GENERAL FEATURES

Kale 164 GR, half type cylinder with satin or brass case. Pins are profile formed MS 58 brass according to the TS EN 1303. The required dimension can be checked from the chart on the corner. Optional anti-drill resistant steel pin version on both sides.

ITO - 254

(Cylinder)

	Satin Nickel	Brass
254 / 62	AKS.KLT.00097	AKS.KLT.00097.B
254 / 68	AKS.KLT.00037	AKS.KLT.00037.B
254 / 76	AKS.KLT.00098	AKS.KLT.00098.B
254 / 80	AKS.KLT.00038	AKS.KLT.00038.B
254 / 90	AKS.KLT.00099	AKS.KLT.00099.B

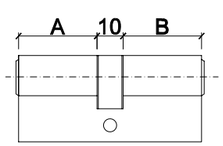

GENERAL FEATURES

ITO 254, standart cylinder with satin and brass finish. Pins are profile formed MS 58 brass according to the TS EN 1303. Optional anti-drill resistant steel pin version on both sides.

DORMA

(Glass Door Cylinder)

CODE
AKS.KLT.00116

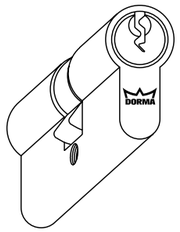

GENERAL FEATURES

Dorma glass door cylinder is used with Dorma glass locks such as Dorma Arcos US 10 and US 20. The cylinder length is 61 mm.

DAFADOOR

(Door Stop)

CODE
AKS.BGL.00038

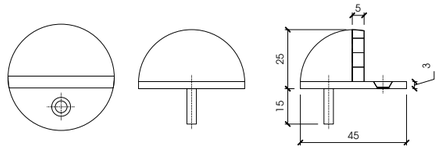

GENERAL FEATURES

Dafadoor dome shaped door stop provides a long lasting usage with 45 mm diameter and 25 mm height. It is mounted on the floor with a screw.

HAFELE

(Door Stop)

CODE
AKS.BGL.00039

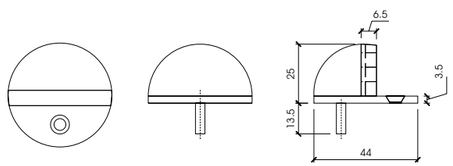

GENERAL FEATURES

Hafele dome shaped door stop with 44 mm diameter and 25 mm height. It is mounted on the floor with a screw.

DORMA - PHA 2000

(Panic Bar)

	CODE
Two Point Lock	AKS.PB.00002
Three Point Lock	AKS.PB.00003

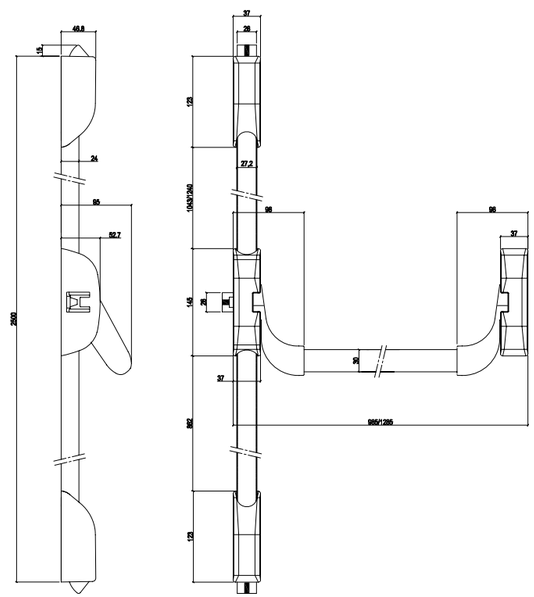

GENERAL FEATURES

Dorma PHA 2000, "pushbar" panic exit device for single leaf doors, to EN 1125 with modular 2 or 3 point locking; 2 point locking as standart.Latch of zinc pressure diecasting and keeper of zinc, with dogging device. For door widths up to 1300 mm and door heights up to 3400 mm. Dorma PHA 2000 is suitable for combination with Dorma PHT series.

DORMA - PHA 2000

(Panic Bar)

	CODE
One Point Lock	AKS.PB.00001

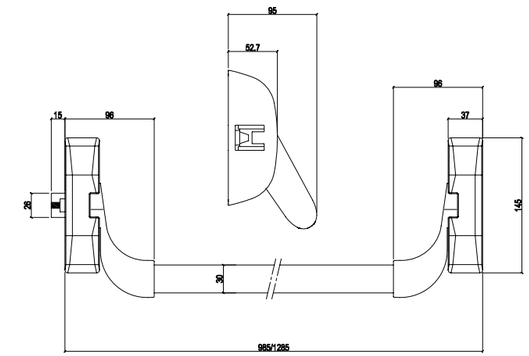

GENERAL FEATURES

DDorma PHA 2000, "pushbar" panic exit device for single leaf doors, to EN 1125 with modular 1 point locking.Latch of zinc pressure diecasting and keeper of zinc, with dogging device. For door widths up to 1300 mm and door heights up to 3400 mm. Dorma PHA 2000 is suitable for combination with Dorma PHT series.

DORMA - PHA 2000

(Panic Bar)

	CODE
Three Point Lock / Double Door	AKS.PB.00004

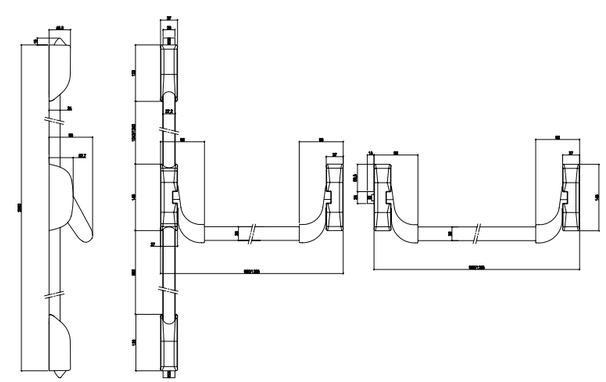

GENERAL FEATURES

Dorma PHA 2000, "pushbar" panic exit device for double leaf doors, to EN 1125. Combination 1 point and 2 point locking. Latch of zinc pressure diecasting and keeper of zinc, with dogging device. For door widths up to 1300 mm and door heights up to 3400 mm. Dorma PHA 2000 is suitable for combination with Dorma PHT series.

DORMA - PHT01

(Panic Door Handle)

Natural (Painted)	Black
AKS.PB.00005	AKS.PB.00006

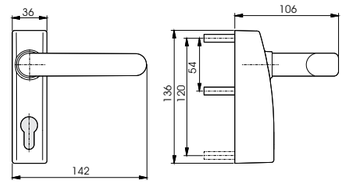

GENERAL FEATURES

External fitting with Dorma OGRO bespoke lever handle, for doors with a leaf thickness of up to 60 mm, prepared for installation of a Europrofile single cylinder.

DORMA - PHT02

(Panic Door Handle)

Natural (Painted)	Black
AKS.PB.00007	AKS.PB.00008

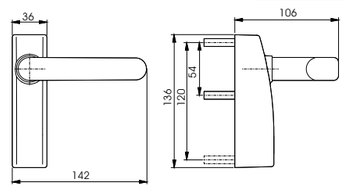

GENERAL FEATURES

External fitting with Dorma OGRO bespoke lever handle, for doors with a leaf thickness up to 60 mm, non-lockable.

DORMA - PHT06

(Panic Door Handle)

Natural (Painted)	Black
AKS.PB.00009	AKS.PB.00010

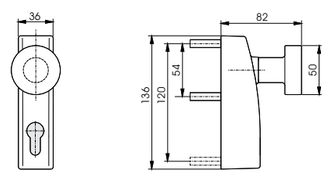

GENERAL FEATURES

External fitting with knob, for doors with a door thickness up to 60 mm, prepared for the installation of a Europrofile single cylinder.

DORMA - RS120

(Sliding Door Mechanizm)

CODE
AKS.KKM.00001

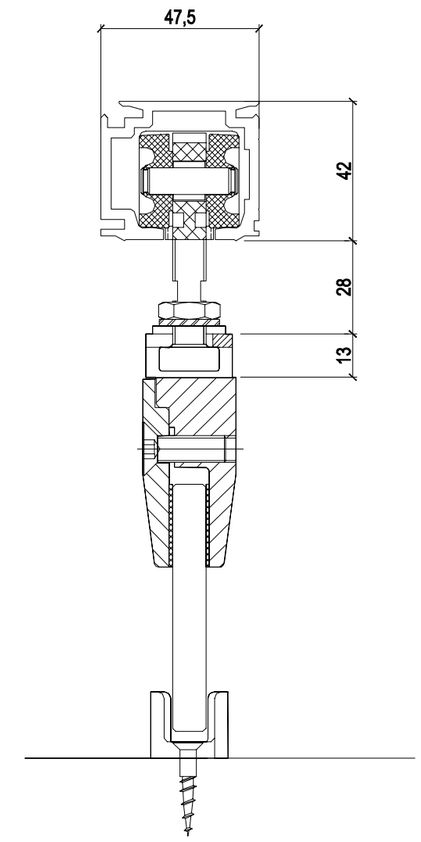

GENERAL FEATURES

The DORMA RS 120 can be mounted directly under the ceiling or onto a wall. 10 mm - 12 mm glass panels and wooden doors can be transported weighting up to 120 kg (with 2 carriers) amd 150 kg (with 3 carriers). The carriers run on large nylon wheels with needle bearings, giving a quiet and very low friction ride. They are made from high grade, glass-fiber-reinforced nylon, which is corrosion resistant and extremely strong.

DORMA - AGILE 150

(Sliding Door Mechanizm)

CODE
AKS.KKM.00002

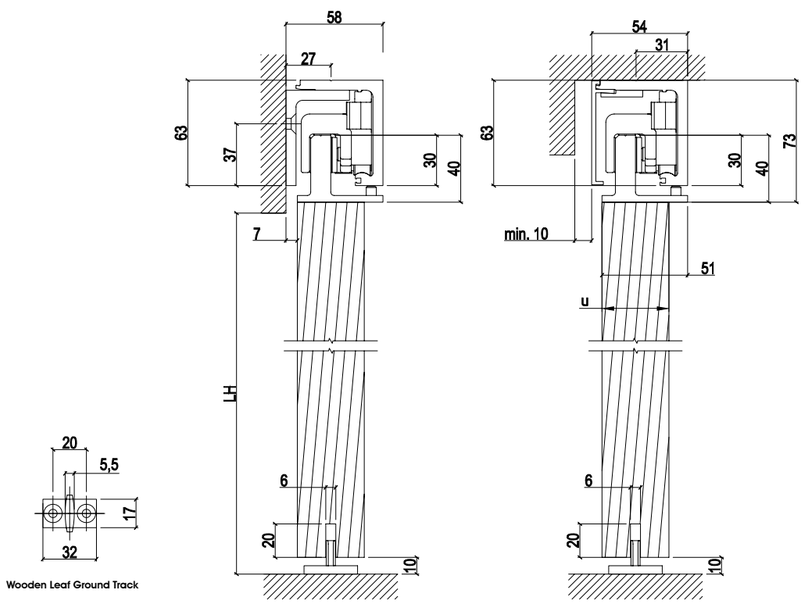

GENERAL FEATURES

The Dorma Agile 150 system operates on a compact track with the roller assembly hidden inside. The track can be mounted on a wall, ceiling or recessed into the ceiling. Agile 150 can transport glass panels and wooden doors weighing up to 150 kg. It also provides ease of operation acc. to DIN EN 1527, Class 3. Glasses with 13.5 mm thickness 8 mm thickness can be used with the system.

DAFADOOR

(Security Latch)

190 SN - Security Latch

CODE
AKS.BGL.00038

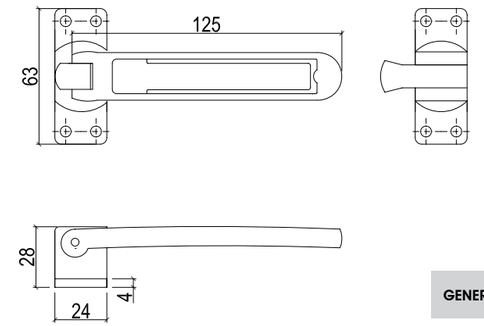

GENERAL FEATURES

DAFADOOR

(Security Latch)

CODE
AKS.BGL.00037

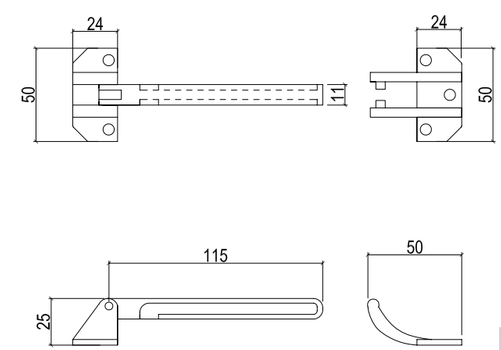

GENERAL FEATURES

HAFELE

(Door Chain)

	Stainless Steel
38,2x35 cm	KOL.00079
53,2x50 cm	KOL.00080
73,2x70 cm	KOL.00081

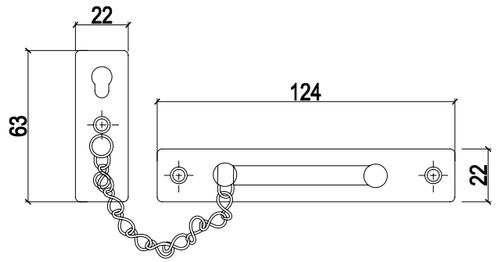

GENERAL FEATURES

HAFELE

(Finger Protection)

	Stainless Steel
40X20 cm	KOL.00082
50X30 cm	KOL.00083
70X50 cm	KOL.00084

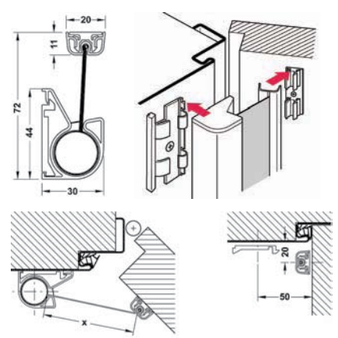

GENERAL FEATURES

INDEX

TECHNICAL **145**

DIN NORMS **149**

GENERAL INFORMATION **150**
- Our manufacturing program 150
- Our free services 150
- Subject to be considered 150
- Additional processing and veneering of the unprocessed chipboard pressed doors 151
- Doors rails 151
- Inner filling material 152
- Outer veneering material 152
- Thickness 152
- Opening direction of the doors 153
- Please of the locks and hinges 154
- Measurements 154
- Determination of widths of the doors tongued (germen) doors 154
- The doors without tongues (pommel doors) determination of the door heights 154
- Door fixing standards 155

DOOR TYPES **156**
- Standard door section (Not fire rated unrebated) 156
- 30' fire rated black frame - wooden door leaf (unrebated) 157
- 30' fire raded s teel frame - wooden (unrebated) 157
- Fire-Protection in Europe DIN EN 1634 158
- 30' Fire rated steel frame - wooden door leaf (rebated) 159
- 30' Fire rated Steel frame - steel door leaf 159
- 30' Fire rated - 38dB sound isolation 160
- Fire-Protection according to DIN 4102 161
- Definition and application areas 161
- Planning law fundamentals 161
- BS-En certified 30' fire rated double door 162
- Building materials 163
- 60' Fire rated wood frame - wooden door leaf (unrebated) 164
- 60' Fire rated wood frame - wooden door leaf (rebated) 164
- Officially accredited test procedures and test criteria 165
- 60' Fire rated wood frame - wooden door leaf (rebated) 166
- 60' Fire rated steel frame - wooden door leaf (rebated) 166
- Test procedures and guidelines 167
- BS-En certified 60' fire rated double door 168
- Permitted modifictions for fire protection closures 169
- 90' Fire rated door 170
- Combination with additional door functions 171

SPECIAL FRAMES **172**
- Adjustable MDF frame 172
- Adjustable Steel frame 172
- Black frame (90x70) 173
- Black frame (63x70) 173
- Black frame (63x90) 173
- Fire rated door with vision panel (63x90) 174
- Demontable steel frame 174

WATER RESISTANCE **175**
- Stainless steel frame (water resistance) 175
- Regulations and requirements 175

RADIATION-PROTECTION **176**
- Radiation door section 176
- Radiation-Protection acc. to DIN 6834 177
- Regulations and requirements 177
- Combination with additional door functions 177

GENERAL INFORMATION **178**
- Configuration 178

VENEER **179**
- Configuration 179

COLOUR COATING **180**
- Configuration 180

HPL **181**
- Configuration 181

HINGES **182**
- DIN norms for hinges 182
- Hinges types 183
- Unrebated hinge 183
- Rebated hingle 184
- Spring hinge 185
- Swing hinge 185
- Concealed hinge 186
- Glass door hinge 186

LOCKS **187**
- Locks According to DIN 18251 and DIN 18250 respectively DIN EIN 12209 187
- General information 187
- Locks According to DIN 18251 and DIN 18250 188
- Requirements and additional functions 188
- According to DIN 18251 and DIN 18250 189
- Configurations and dimensions 189
- Narrow style lock 190
- Configurations and dimensions 190
- Radiation-Protection lock 191
- According to DIN 6834 191
- Lock types 192
- Cylinder Sashlock 192
- Room Lock 192
- Bathroom Lock 193
- Latch Lock 193
- Panic Lock 194
- Swing Door Lock 194
- Sliding Door Lock 195
- Knob lock 195
- Multisystem Lock 196
- Radiation Lock 197
- Glass Door Lock 197
- Glass Door Lock and Striking Plate 197

HANDLES **198**
- Configurations 198
- Height of the handles 199
- According to DIN 18255 200
- Terms and requirements 200
- According to DIN 18257 and DIN 18273 201
- Terms and requirements 201
- Configuration versions 202
- Handles and backplate forms 202

RETRACTABLE BOTTOM SEALS **204**

KICK AND PUSH PLATES **206**

VENTILATION GRILLE **207**
ESCAPE DOOR SYSTEMS **208**
SMOKE-PROTECTION **210**
Smoke-Protection acc. to DIN 18095 210
Planning laws and test procedures 210
Test procedures and guidelines 211
Combination with additional door functions 212
SOUND-INSULATION **213**
Sound-Insulation acc. to DIN 4109 213
Planning laws 213
Significant values 214
Regulations for Sound-Insulation-Doors 215
Installation and mounting 216
Combination with additional door functions 217
BURGLAR-PROTECTION **218**
Burglar-Protection acc. to DIN V ENV 1627 218
Classification and test procedures 218
Configuration WK 1, WK 2, WK 3 and WK 4 219
Combination with additional door functions 221
BULLET-RESISTANT M3 ..... **222**
Regulations and requirements 222
Combination with additional door functions 222
HEAVY-DUTY SOLID CORE DOORS **223**
CLIMATE CATEGORIE **224**
Climate categories acc. to DIN EN 1121 224
Requirements and test procedures 224
THERMAL INSULATION **225**
Regulations and requirements 225
STRESS GROUPS **226**
ELECTROMAGNETS **227**
INSTALLATION **228**
Maintenance, troubleshooting and protection 231
SPECIAL NOTES BY DAFADOOR **235**
CARE, FINISH AND MAINTENANCE GUIDE **236**
CAUTION 237
CLASSIC AND SOFT LEATHER 237
ELEGANCE LEATHER 238
NATUREL LEATHER 239
SUEDE 239
LAQUERED WOOD 240
STAIN REMOVAL 240
POLYESTER COMPOSITE 243
GLOSSARY OF TERMS **244**
SURFACE FINISH **250**
VENEER **252**
LACQUERED **254**
LAMINATE **256**

DIN NORMS

Doors and door accessories

Fire behaviour of building materials and structural elements	DIN 4102
Smoke protection doors	DIN 18095
Fire protection doors - classification	DIN 13501
Window and door product norm	DIN EN 14351
Testing of fire and smoke protection doors	DIN EN 1634
Sound insulation measurement	DIN EN ISO 140
Sound insulation for multistorey buildings	DIN 4109
Burglar protection door	DIN V ENV 1627
Radiation protection doors for medically used rooms	DIN 6834
Interior doors made from wood and wood-based panels	DIN 68706
Wall openings for doors	DIN 18100
Doors for domestic buildings	DIN 18101
Steel frames	DIN 18111
Mortise locks for fire protection closures	DIN 18250
Mortise locks for doors	DIN 18251
Profile cylinder for door locks	DIN 18252
Door handles, door backplate and door rosettes	DIN 18255
Door handles, door knob	DIN EN 1906
Door handles for FS and RS doors	DIN 18273
Security fittings	DIN 18257
Emergency exit closures	DIN EN 179
Panic door closures	DIN EN 1125
Door closers with hydraulic absorbability	DIN 18263
Door closers with controllable closing function	DIN EN 1154
Door hinges, hinge reference line	DIN 18268
Hinges for fire protection doors	DIN 18272
Door hinges	DIN EN 1935
Behaviour between two different climates – test procedure	DIN EN 1121
Climatic effects - requirements and classification	DIN EN 12219
Mechanical stress	DIN EN 12400
Dynamic deformation	DIN EN 130
Static deformation	DIN EN 948
Soft impact	DIN EN 949
Hard impact	DIN EN 950
Automatic door systems	DIN 18650

GENERAL INFORMATION

dafa door Doors of types with or without glasses, manufactured in conformity with Din 68706, are being used inside or outside of the Houses, Hospitals, Schools, Hotels and Administrative Buildings, and they can be installed to steel sheet and wooden cases of any type and dimensions. In the applications abroad, classification rules established in accordance with the locations, where the doors are used, and with the properties of the doors are also applied in our manufactures in exactly the same manner.

Our manufacturing program

- Pressed chipboard and plywood doors and cases ready for painting,
- Veneered and pressed, and rustic doorsand cases,
- Massive doors and cases,
- Pressed sliding doors,
- Special doors and cases
- Fire-resistant doors and cases,

The doors and the cases are not influenced from the head and other effects by means of our advanced experience and manufacture technology if obeyed the maintenance and painting rules.

Our manufactures are being used by the most distinguished firms of our country in the constructions at home and abroad.

Our free services

Our firm is always ready for your service with its technical staff and documentation.

- Information about installation,
- Architectural documentation,
- Door section,
- Technical advise,
- Architectural advise

When required, the dimensions of the doors and cases, the manufactures of which shall be taken by our firm. The materials used in our manufactures are of first class and the manufactures delivered are warranted.

Subject to be considered

After taking the delivery of the doors, during the period elapsed until they are installed the following subjects should be considered.

- The doors should be stacked in the rooms with normal moisture (the moisture content is below 65%), as horizontal on three pieces of wood blocks and in such a manner as not to absorb the moisture of the floor and the walls.
- The locations in new constructions, where the doors shall be installed, should thoroughly by entilated beforehand.
- Each coat of oil painting on the doors should be applied on both sides.
- After the doors are painted, they should not be leaned against the walls and they should.
- immediately be installed to their places.
- Installing the polished doors should be done after the other construction works are completed.

Additional processing and veneering of the unprocessed chipboard pressed doors

- The massive woods used in the doors (hard or soft wood)should almost contain a moisture of 12%.Heat-resistant massive wood adhesive should be used.
- After producing the massive part of the door, veneering shall not be made before 24 hours and veneering shall be of the same thickness with the massive part
- Before the process of pressing, the air vents at the lower and upper parts of the doors shall again be opened.
- Veneering to be placed should not be wrinkled or dirty spot on the upper surface of the door, it shall be sauded with a hand Carborundum before applying the adhesive.The adhesive shall be applied on the door with a roller or adhesive machinery at the rate 120 gr/m^2.
- A pressure larger than 2.5 kg/cm2 shall not be used during the process of pressing.
- Pressing shall be made at an average temperature of 90 C and in 3-5 min.
- The doors, the processes of pressing of which were completed, shall be covered on both sides and they shall be dimensioned after waiting at least 24 hours.
- Polishing shall be applied to the doors from both sides.

Doors rails

Fir timber is used as door rail which is one piece,35/48 mm thick and dried specially (maximum 12% moisture).The lock and hinge ocations are additionally reinforced. Other thanthat, requirements should be specified specially.

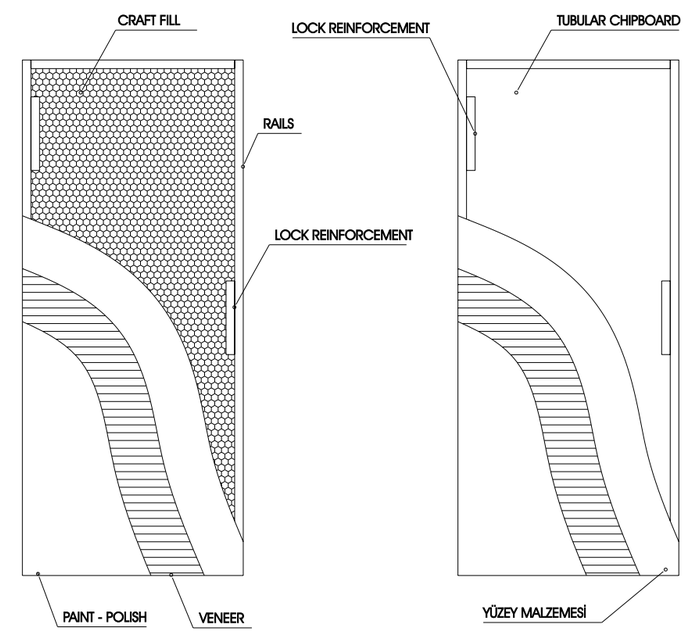

Inner filling material

Chipboard with holes strips of the dimensions 20/35 mm were placed with intervals of 20-25 mm in accordance with the features of the door. Another type of filling material is resine cured craft paper. This one increase the sound insulation and decrease the weight of product.

Outer veneering material

MDF or plywood of 4-5-6 mm thick should be used as outer surface veneering. The standard doors are ready for painting. In addition, any type of veneering (Oak, mahogany, walnut, laminated board, etc.) may be coated on the chipboards.

Thickness

The completed thickness of the doors is 40-90 mm and of the cases is 30-85 mm and it varies in accordance with the material selected.

Opening direction of the doors

Opening direction of the doors in the orders for the tongued doors should be notified in accordance with DIN 107.

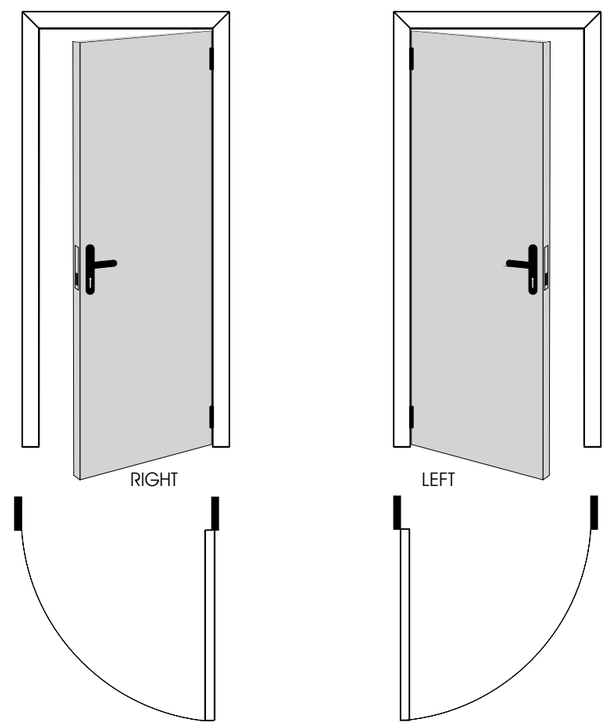

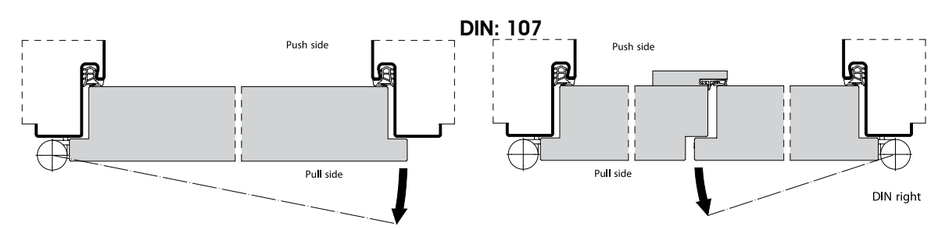

The labeing of a door leaf as DIN right or DIN left results from the pull side.
For 2-leaf doors DIN direction is determined by the active leaf.

Please of the locks and hinges

Unless otherwise required, the places of the locks and the holes of the handles are opened in accordance with the locks conforming to TS 179. The distance between the midpoint of the door lock bolt and the upper tongue should be measured on the doors to be manufactured for the cases available.

Measurements

CONSTRUCTION OPENING
(Completed flooring)

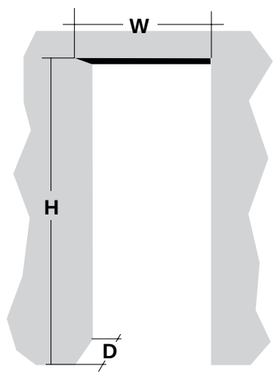

FRAME MANUFACTURE
DIMENSION
(From outside to outside)

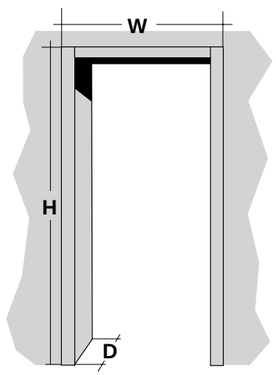

DOOR WING
MANUFACTURE
DIMENSIONS

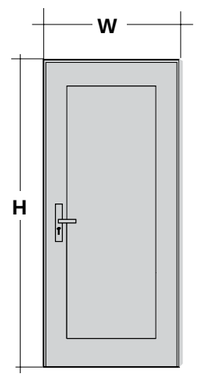

Determination of widths of the doors tongued (germen) doors

The distance between the two tongues (A) is measured for every door to be installed at the locations where the cases (steel sheet or wood) are available. The distance between the two walls (B) is measured where the cases are not available.

The doors without tongues (pommel doors) determination of the door heights

The distance from the upper tongue to the floor (C) is measured where the cases are available and the construction opening without floor (D) is measured or if the floor has been constructed, the opening up to the top of the (E) is measured where the cases are not available. Door working tolerances and case installing tolerances are not deducted in the measurements. The floor covering thickness to be laid over the floor are separately notified in accordance with the rooms.

Door fixing standards

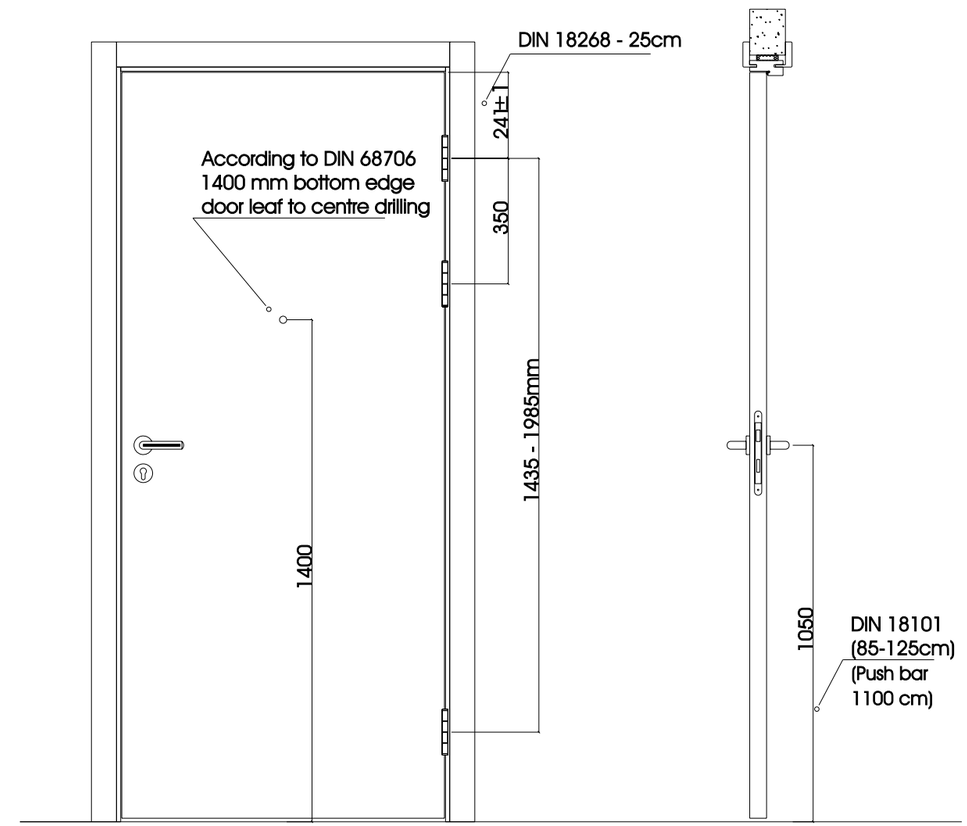

Standard door section (Not fire rated unrebated)

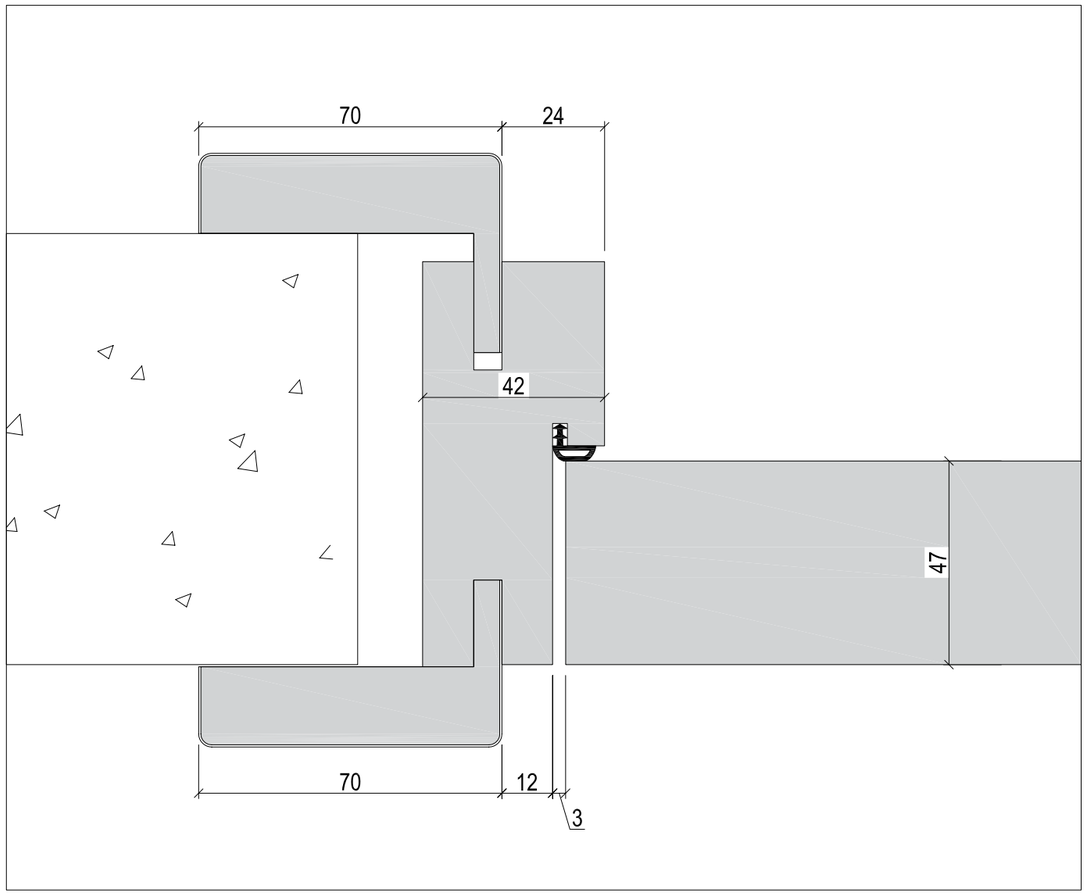

30' fire rated black frame - wooden door leaf (unrebated)

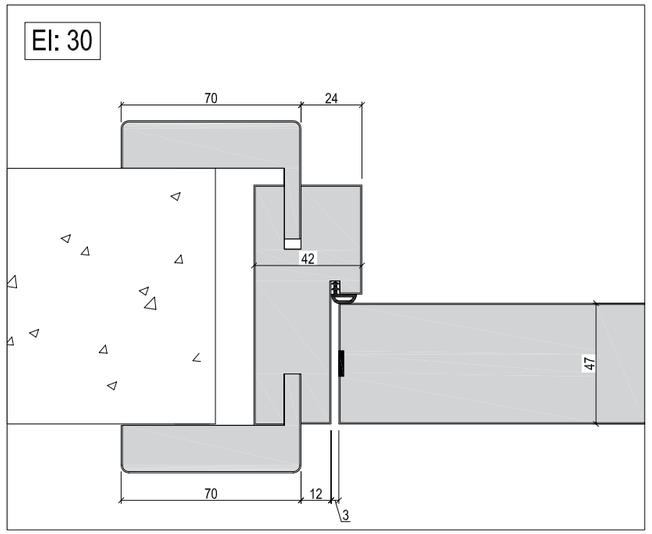

30' fire raded s teel frame - wooden (unrebated)

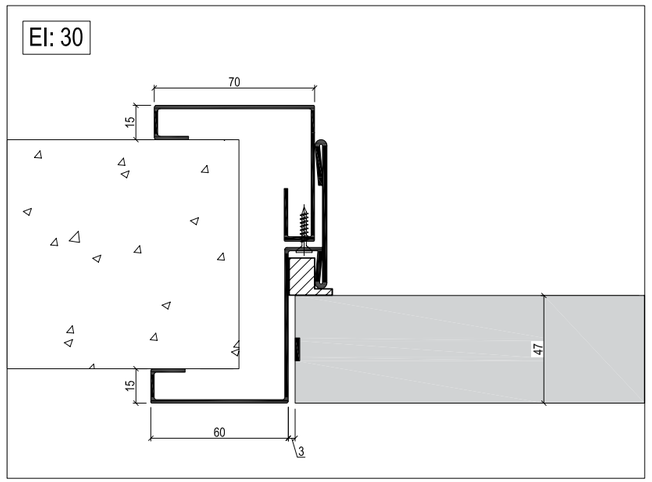

Fire-Protection in Europe DIN EN 1634

Fit for Europe!

In the course of the European harmonisation and the creation of a huge European SingleMarket, the adaptation of planning laws (standards and structural regulations) in order to meet the new requirements is realised as well.

New standards for the approval of fire protection closures in the field of fire protection have already been set.

- **DIN EN 1634-1 Fire resistance approvals for doors and closures,**
  part 1: Fire protection closures
- **DIN EN 1364-1 Fire resistance approvals for non-load-bearing structural elements,**
  part 1: Walls

The requirements to meet these new European standards have been raised drastically, a good example of these measures are the modified temperature sensors within the DIN EN 1634-1 and the increased pressure conditions in the test station. Due to these changes the intensity of the fire impact and therefore the strain on the fire protection closure have considerably increased compared to the DIN 4102-5.

Since the appearance of the new EN standards Dafadoor develops and tests solely according to the new defined requirements. Therefore it is possible for Dafadoor to offer its customers state-of-the-art products, which certainly also meet future requirements!

Besides the new approval regulations new classification standards (DIN EN 13501-1 to -3), dividing fire protection closures into new categories, have been set.

Doors	
DIN 4102	DIN EN 13501-2
T 30	$EI_2$30-C5
T 30 / RS	$EI_2$30-C5S_{200}
T 90	$EI_2$90-C5
T 90 / RS	$EI_2$90-C5S_{200}

Glazings	
DIN 4102	DIN EN 13501-2
F 30	$REI_2$30
F 90	$REI_2$90

Until the complete adoption and integration of the new EN standards within the existing national building laws, it is necessary for all persons involved on the construction site to inform themselves in terms of the current development.

In the field of Fire-Protection-Doors and -Glazings Dafadoor is your professional partner concerning the new EN standards!

30’ Fire rated steel frame - wooden door leaf (rebated)

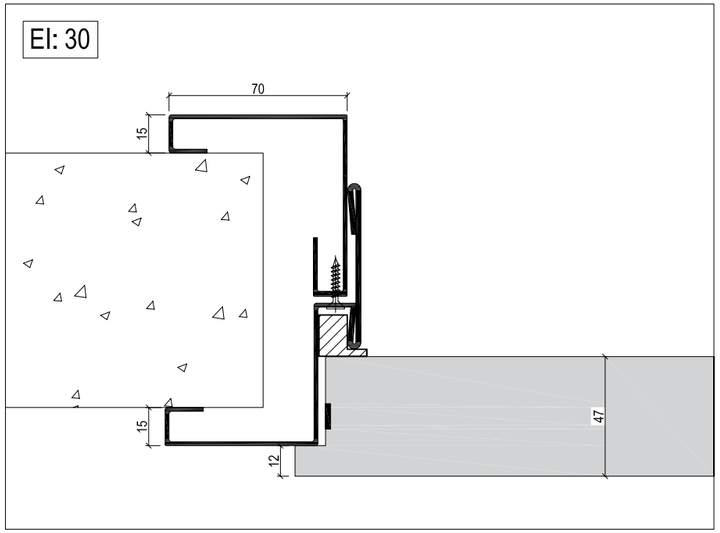

30’ Fire rated Steel frame - steel door leaf

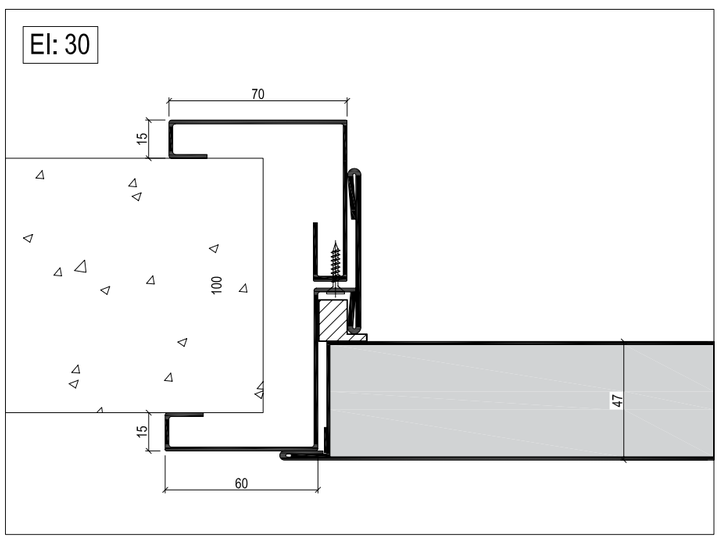

30’ Fire rated - 38dB sound isolation

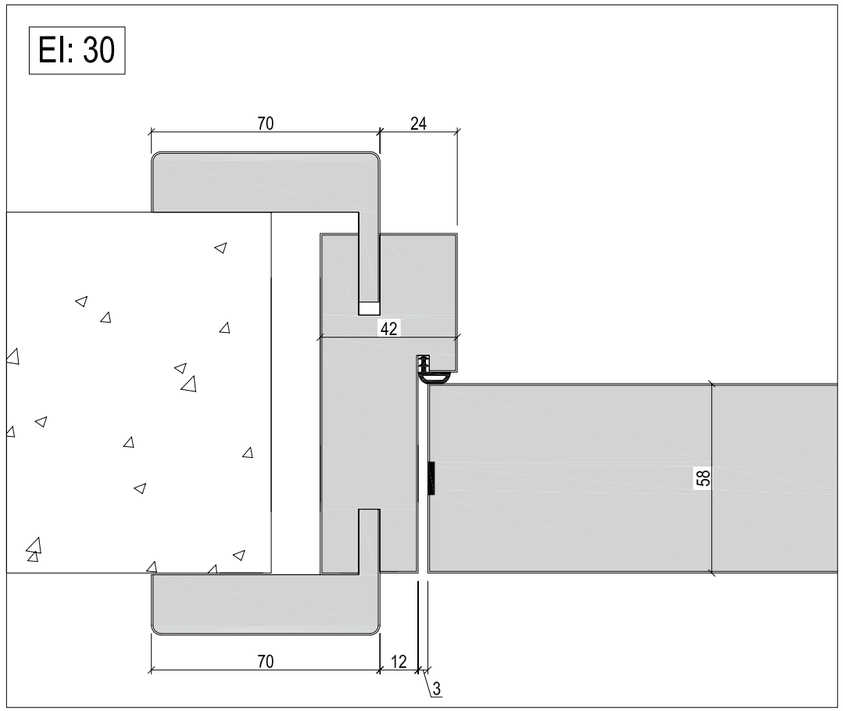

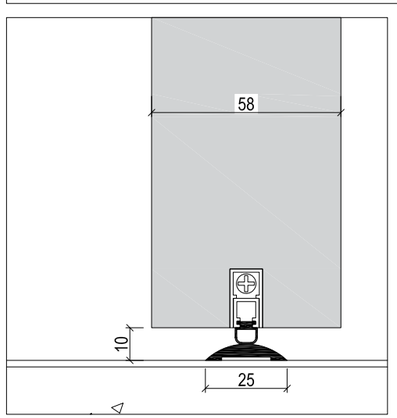

Fire-Protection according to DIN 4102

Definition and application areas

Requirements for buildings and structures

According to the building standard buildings and structures have to be constructed to prevent the spreading of fire and smoke. Structural elements which have to meet fire protection requirements such as walls, ceilings or fire protection closures can be found in any building project.

The DIN 4102 is a German building law which nationwide regulates the preventive fire protection. The DIN 4102 defines Fire-Protection-Doors as fire protection closures.

In section 5 and respectively section 13 (glazings) of DIN 4102, terms, requirements and testings for fire protection closures are described.

Definition of fire protection closures

Fire protection closures are self-closing doors and closures such as flaps and gates which, correctly installed, are designed to prevent fire from passing through openings in walls and ceilings.

Application areas

In certain areas, such as long hallways, stairways, firewalls, emergency exits as well as the sealing-off of escape routes, doors have to either fire protective or smoke protective. The planning and construction of buildings each underlie different building regulations and legal terms. Especially in buildings with a high visitor frequency as well as buildings which are inhabited by elderly, sick or handicapped people concern the the safety precautions of the preventive fire protection. Examples are:

- Schools and universities
- Kindergartens
- Hospitals
- Retirement homes
- Hotels
- Administrations
- Banks
- Offices

Fire protection closures reliably seal the critical gap of escape and rescue routes within buildings and structures and therefore guarantee the safety of the inhabitants.

Planning law fundamentals

Regulations and guidelines

The DIN 4102 (fire behaviour of building materials and structural elements) substantiates the terms of the state regulations, the related executive orders as well as additional administrative regulations, which concern constructural fire protection. Planning law fundamentals are:

- State regulations with their additional clauses, e.g. execution specifications
- Executive orders such as workplace regulations, restaurant regulations, regulations for places of public assembly, warehousing regulations or hospital regulations
- Administrative regulations and guidelines concerning the usage of combustible construction materials, multistorey building guidelines, school building guidelines, guidelines for sports facilities

The introduction of regulations and guidelines is business of the states, therefore the validity is **state-specific** as well.

Objectives of the constructural fire protection

- Reduction of the occurrence of fires to a minimum
- Guarantee of structural stability in case of fire
- Prevention or repression of the spreading of fire within buildings or to other parts of the building
- Guarantee of the rescue of people in case of fire
- Enabling or assistance of the firefighting by the fire brigade
- Protection of material assets

BS-En certified 30’ fire rated double door

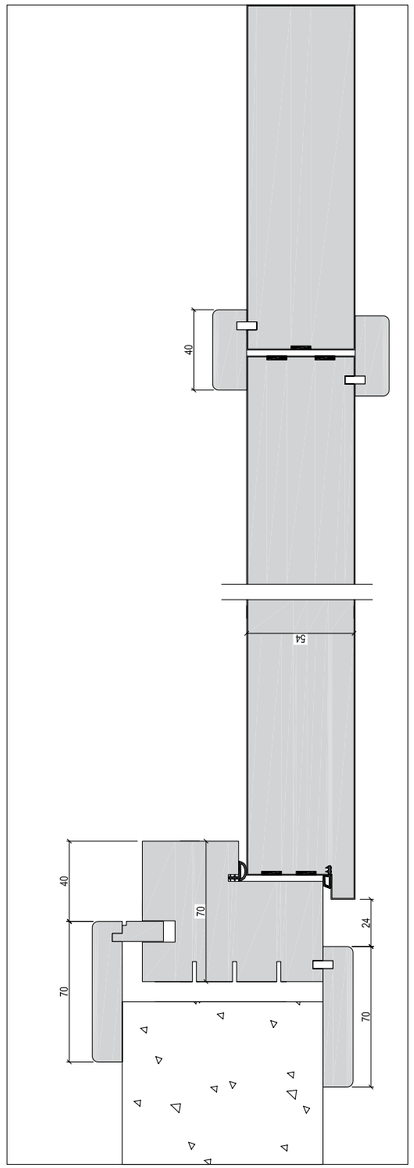

Classification of construction materials

The classification of construction materials is regulated in DIN 4102, part 1. The type of fire is an important factor for the classification. Construction materials are divided in:

non-combustible	**combustible**
(construction material class A)	(construction material class B)
A1 non-combustible and also flameproof	**B1** hardly inflammable
A2 non-combustible	**B2** normally inflammable
	B3 easily inflammable

Classification of structural elements

An additional categorisation, of structural elements, is regulated in DIN 4102, part 2. The structural elements are assigned a letter for identification. Due to their ability to withstand fire for a defined time span, they are classified by the **fire resistance period.**

The resistance period is the classifing factor for the fire behaviour of structural elements. The following fire resistance classes are defined:

T 30, F 30, G 30	≥ 30 minutes fire resistance period
T 60, F 60	≥ 60 minutes fire resistance period
T 90, F 90	≥ 90 minutes fire resistance period

Building materials

Building materials

Building materials are construction materials, structural elements and equipment designed to be permanently installed in buildings and structures.

Building code

The applicability of building materials for a certain building project is defined by the state regulations, which relate to the building code. The German institute for building technology (DIBt) publishes the building code. Building materials listed in part A are considered regulated building materials. Non-regulated building materials (no generally approved technical rules or technical building clauses) have to be confirmed by either:

- An official technical approval
- An official certificate
- An approval for the individual case

Official technical approval

Fire-Protection-Doors and Glazings need to be officially technical approved. The manufacturer has to provide evidence of the approval by attaching an **offical label** on the edge of the door leaf and by handing out a copy of the official technical approval.

Furthermore the manufacturer has to provide contractural evidence and proof that the production of its Fire-Protection-Doors is **monitored** by a certification authority in terms of constant quality and compliance with approval regulations. In case of Fire-Protection-Glazings these documents are substituted by the manufacturers declaration of compliance.

Official certificate

If building materials have no relevant safety or health requirements or if they are judged by officially accredited test procedures, an official certificate is adequate.

60’ Fire rated wood frame - wooden door leaf (unrebated)

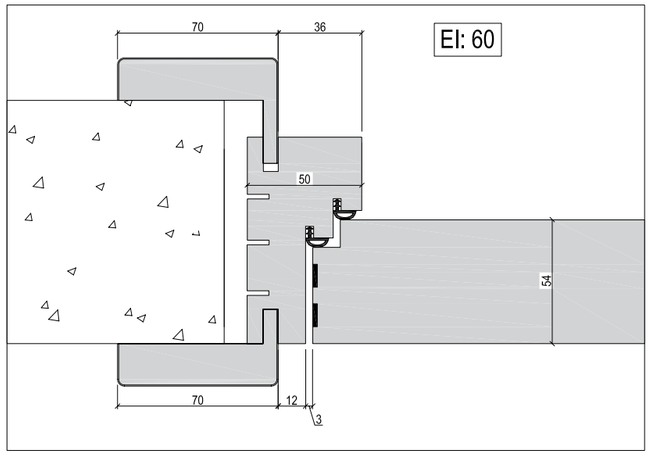

60’ Fire rated wood frame - wooden door leaf (rebated)

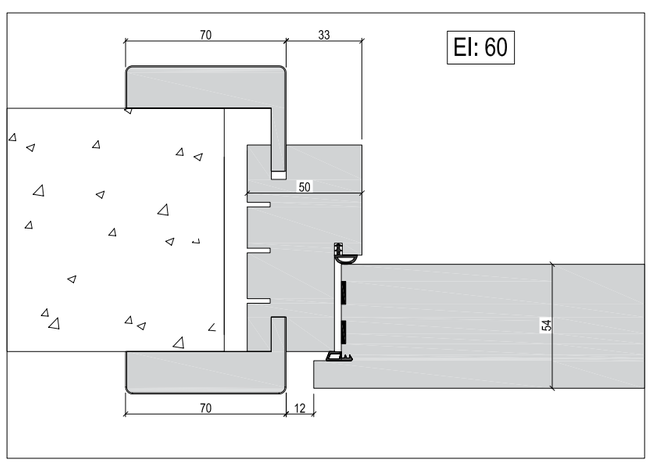

Approval for the individual case

In case of a structural situation demanding unapproved models of a Fire-Protection-Door, a socalled approval for the individual case is necessary. This approval can only be issued by the responsible **building supervisory board** under the condition of bringing forward the necessary verifications of suitability. The approval **for the individual case** is construction project specific and can not be applied elsewhere.

Officially accredited test procedures and test criteria

Fire resistance test

Every fire is different regarding its origin, the ignition sources, the flammability of the burning materials or the oxygen saturation, just to cover some of the most important components.

To accommodate all these different components and fire behaviours in a fire resistance test for structural elements, it was internationally agreed on to assume **a general course during the burning process.**

That is how the so called **uniform-temperature-time-curve** (UTTC) originated, which is also internationally recognised as ISO-curve. This curve predetermines the fire and temperature course during a classifying fire resistance test for structural elements. The test for Fire-Protection-Doors and -Glazings takes place in a burning installation, where the test item is flame impinged on one side while the temperature rises according to the UTTC.

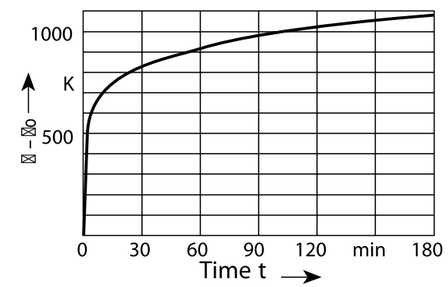

Test criteria

The significant criteria for the preventive fire protection according to DIN 4102 concerning the testing of fire protection closures can be summond in the following points:

- Fire resistance test according to UTTC and DIN 4102, part 5
- Granting of the space enclosing effect of the fire protection closure
- Prevention of fire passing through
- Structural stability of the fire protection closure
- The increase of temperature on the flame impinged side: at an average of up to 140 K; short-term on selective areas up to 180 K.

After 30 minutes the temperature in the burning installation is about 850° C according to UTTC, after 90 minutes about 1000° C.

Long-term durability test

Regarding a service life of 20 years Fire-Protection-Doors undergo a long-term durability test according to DIN 4102 part 18. The test requires 200.000 opening cycles, during which, door leaf , frame and fittings are tested as a set.

60’ Fire rated wood frame - wooden door leaf (rebated)

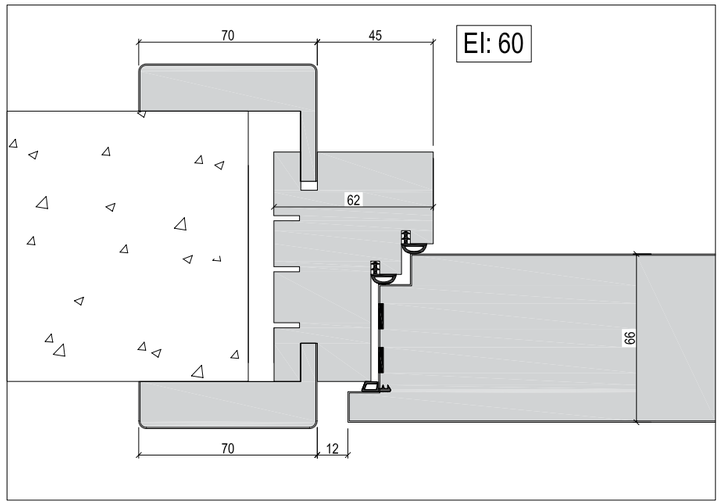

60’ Fire rated steel frame - wooden door leaf (rebated)

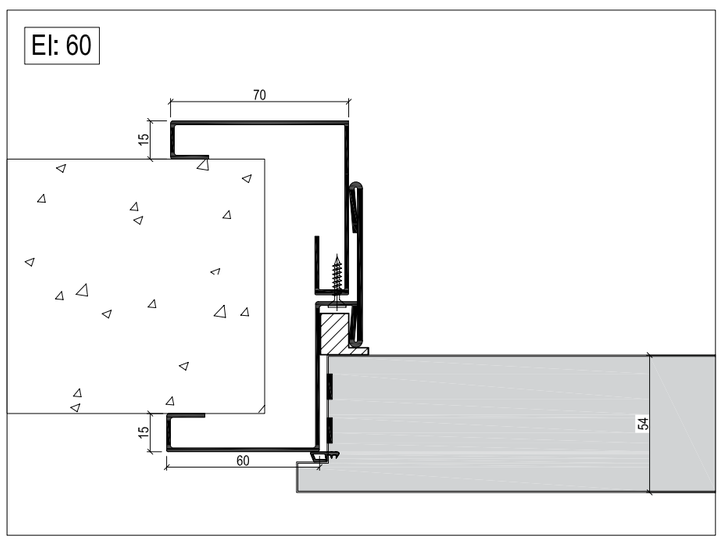

Test procedures and guidelines

Testing procedure

The testing of Fire-Protection-Door sets is carried out according to DIN 4102 part 5 including a long-term durability test according to part 18. Fire-Protection-Glazings are approved by accredited institutes for material testing according to DIN 4102 part 13. With the approval of the German institute for building technology in Berlin (DiBt) the door set is certified for all states.

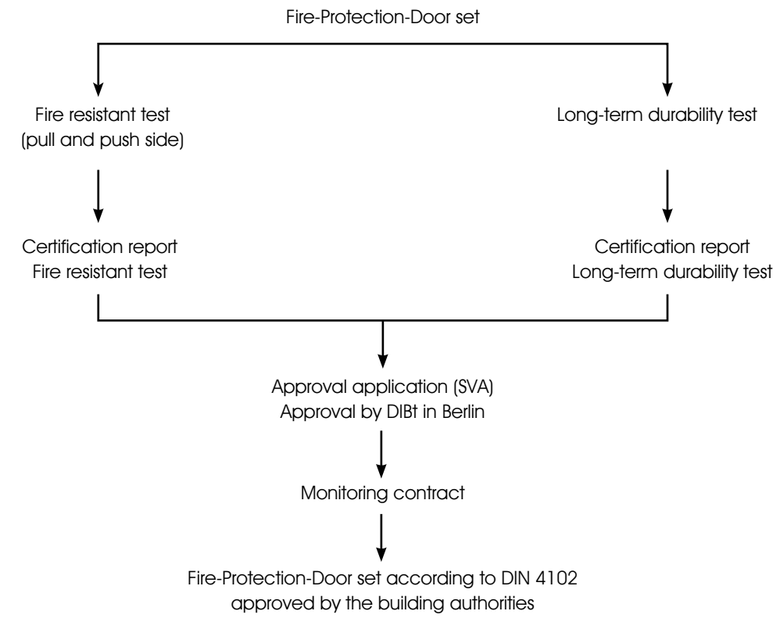

Delivery set

As an approved set, door leaf, door frame and the necessary fittings, form the complete delivery set. In regard of the requirements for the self closing function, only approved door closers and hold-open devices (see index door closers), as well as the usage of FS-proven locks and handles (see index locks, handles) are allowed.

Labeling and monitoring

The fire protection function has to be verified by the manufacturer by attaching an official label on the edge of the door leaf and by handing out a copy of the official technical approval. The manufacturer certifies the appropriate configuration of the door set by self- and third partymonitoring with the German Mark of Conformity (Ü)

Approved installation

While mounting the door set, the compliance of the approved installation as well as the correct combination with wall types and/or Fire-Protection-Glazings, is inevitable. According to part 13 of DIN 4102 official approvals are only issued for combinations of Fire-Protection-Doors and Fire-Protection-Glazings which meet the same fire resistance requirements.

BS-En certified 60' fire rated double door

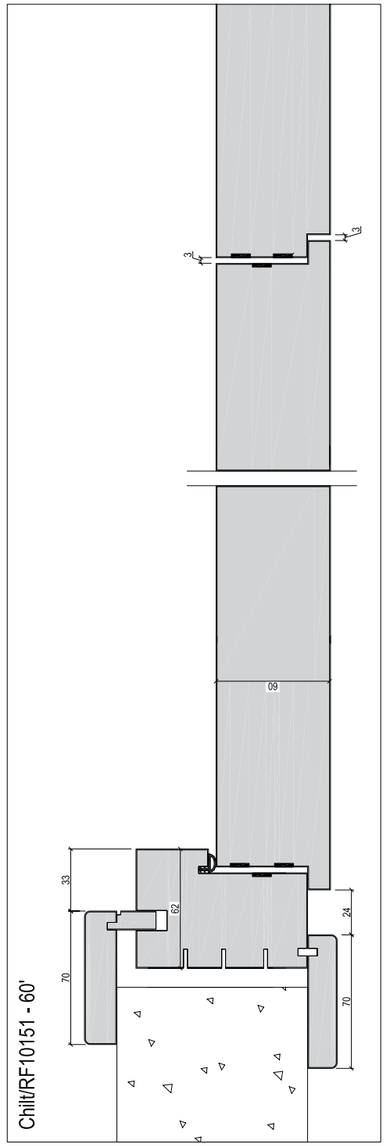

Permitted modifictions for fire protection closures

On site modifications

Besides the option to shorten the door leaf of T 30 Fire-Protection-Doors according to the approval, respectively the metal shortening label on the door leaf edge also the current version of the DIBt approval have to be followed if a **Fire-Protection-Door is modified.**

The following on site modifications on already fabricated fire resistant closures are, according to a notification of the DIBt from the 1. of February 1996, allowed:

- **Mounting of contacts**

For example Reed-contacts and strike plate contacts (bolt contacts) for breach control, provided that they are attached or mounted in factory-made cut-outs.

- **Lock replacement**

A lock replacement is only possible if the lock is replaced by an adequate self-locking or motor-powered lock with latch. Furthermore the replacement is only permitted if the lock can be fitted into the existing lock body and as long as the strike plate does not have to be modified. A later installation of an electrical strike is not permitted; except the door frame has been prepared by the manufacturer.

- **Attatching of cabels on the door leaf**
- **Installation of optical door viewers**
- **Adhesive label**

The screwing, riveting or gluing of adhesive labels onto the door leaf.

- **Kick plates**

The screwing or gluing of metal sheet stripes (up to a height and width of up to 250 mm) onto the door leaf, for example kick or edge protection.

- **Ram protection bar**

The attaching or ram protection bars and tube handle bars where required using reinforements (for the attachment of troughout thread rods the drilling must not be more than 12 mm in diameter).

- **Pushbar**

The attatching of befitting pushbars, if, according to the manufacturer's information, adequate mounting points are present.

- **Complementing of z- and steel corner frames**

With counter-frame for steel wrap-around frames.

- **Complementing of wooden frames**

By the attaching of wall junction mouldings.

- **Affixing of bars (decorative beads)**

Possible in any shape and position on the glazing, either made of wood, plasitc material,aluminium or steel.

- **Nailig and gluing of wooden bars on woodens**

Dimensions of up to 60 mm x 30 mm, but with a maximum of 12 dm3 on each side, there is no restriction for the affixing of decorative beads on wooden frames. In general, the modifications and complementings must not affect the functional capability of the fire protection closure (for example the self-closing function).

90’ Fire rated door

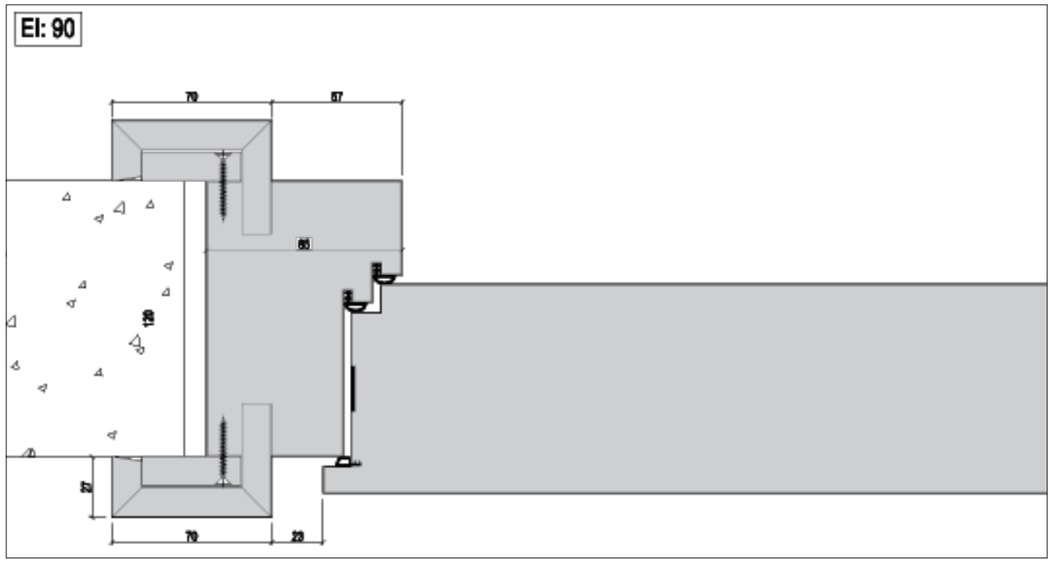

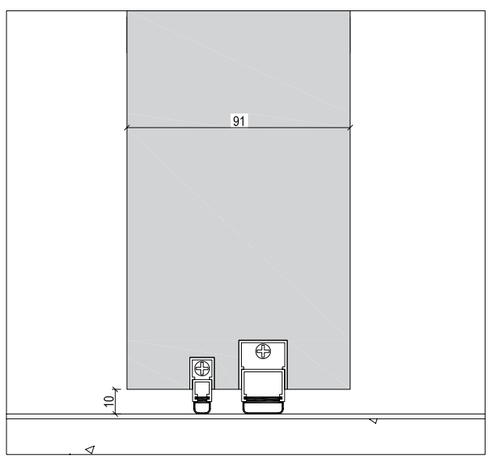

Combination with additional door functions

Sound-Insulation

T 30, T 60, T 90 and T 120 doors with factory-equipped effective bottom seal or a 4-sided frame, by default meet Rw,P 32 dB sound insulation requirements. With Fire- and Smoke-Protection-Doors, even higher sound insulation values are possible. For the possible performance range see the table multiple functions with Sound-Insulation.

Burglar-Protection

1- and 2-leaf Dafadoor Fire-Protection-Doors meet, with special factory-equipment, the requirements for resistance classes WK 2, WK 3 and WK 4. The attack side can be chosen from either the pull or push side. Configurations such as vision panels, fanlights, counter-rebated top panels or the installation in lightweight partition walls or respectively Dafadoor F 30 Fire-Protection-Glazings are possible. Different frame variations, made of either steel, wood or wooden materials, can be applied. For extensive possibilities see the table multiple functions with Burglar-Protection.

Smoke-Protection

All T 30, T 60, T 90 and T120 Dafadoor Fire-Protection-Doors can be, due to a factory-equipment with an effective bottom seal, fitted with an additional smoke protection function. T 30, T 60, T 90 and T 120 Fire-Protection-Door sets with 4-sided frame as well as T 30 flaps already meet, due to a circumferential sealing level, the smoke protection requirements. As a general rule, Fire-Protection-Doors with an additional bottom seal for smoke protection function must not be shortened on site.

Dafadoor F 30 and F 90 Fire-Protection-Glazings are by default considered smoketight, if installed, according to regulations, with elastic sealed joints.

The 2-leaf doors, with fire and smoke protection function by default feature a rabbet ledge on the top panel.

Radiation-Protection

Solid 1- or 2-leaf doors without top panel are available with an additional radiation protection function (lead equivalent value of up to 4 mm). If the lead equivalent value is 2 mm or more a lock with shifted follower and cylinder drilling is used. The bolting of the inactive leaf for 2-leaf door sets is realised with a conseald shot-bolt lock. 7

Bullet-Resistant M 3

The solid door T 30 in special design with steel frame meets the requirements for a Bullet- Resistant-Door.

Wet Room

T 30 doors, in special design can be constructed as Wet Room Doors with the adequate materials.

Climate category II

The whole range of Dafadoor Fire-Protection-Doors meets the requirements for Climate category II. Due to constructive actions all doors, except the solid wood framed door, are available in Climate category III.

Climate category III

The T 30 door by default meet the requirements for Climate category III.

Climate category IV

This high standard can be reached with very special doors.

Thermal insulation

In combination with the T 30 fire protection function meets high thermal insulation requirements.

Mechanical stress group

All solid doors in the range of Dafadoor Fire-Protection-Program by default meet the requirements of the Stress group S, therefore they resist static and dynamic deformation as well as hard and soft impact.

The door types in special design also meet the requirements of the Stress group E. On request also other door types can be upgraded to this standard.

SPECIAL FRAMES

Adjustable MDF frame

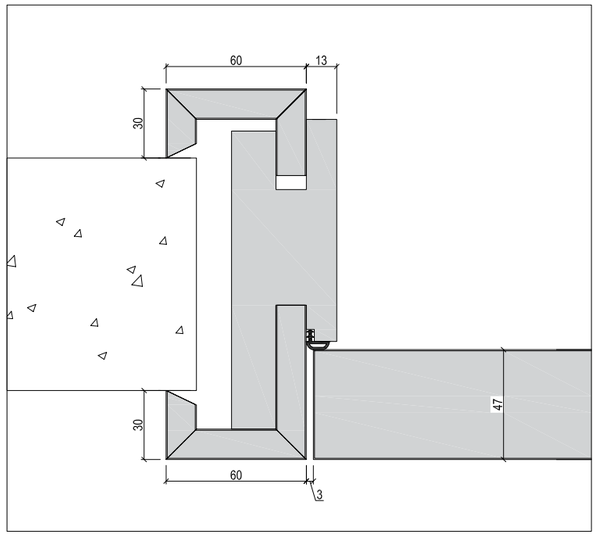

Adjustable Steel frame

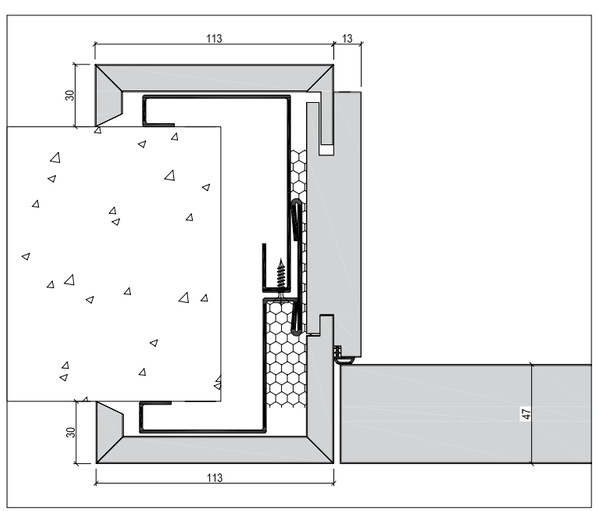

Black frame (90x70)

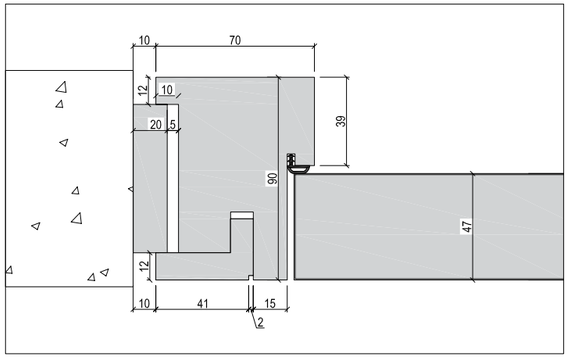

Black frame (63x70)

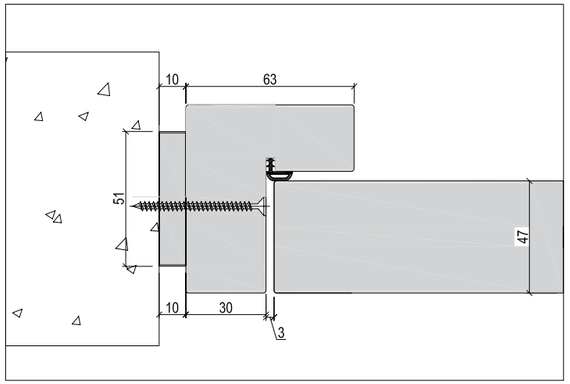

Black frame (63x90)

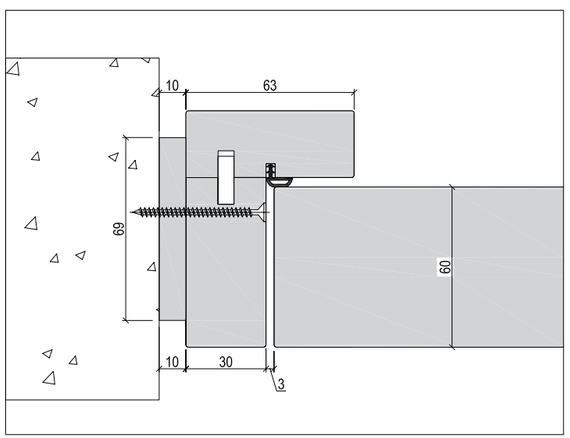

Fire rated door with vision panel (63x90)

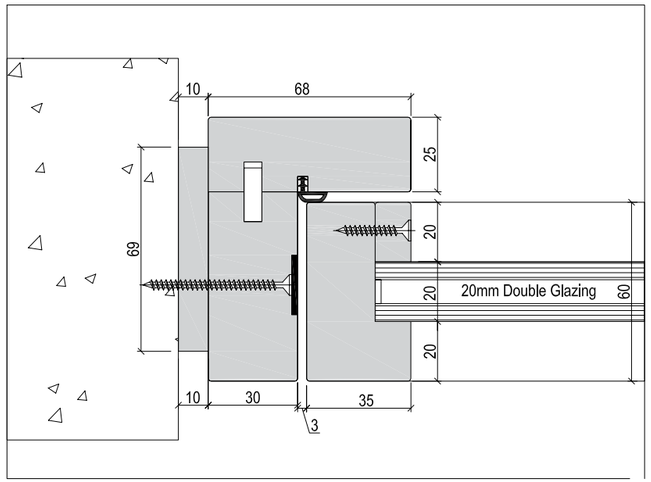

Demontable steel frame

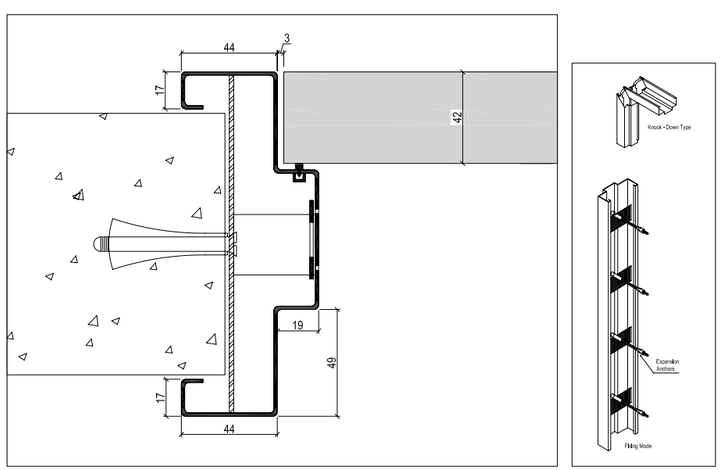

Stainless steel frame (water resistance)

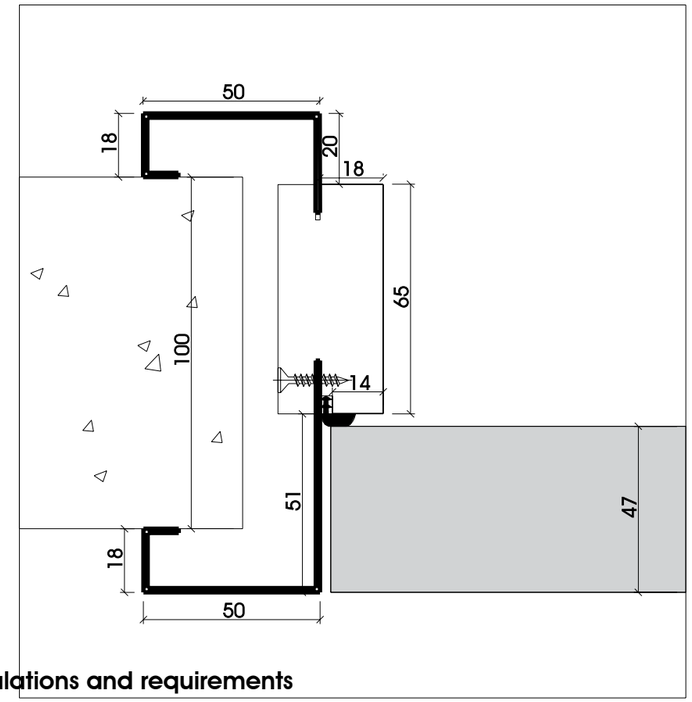

Regulations and requirements

Wet Room Doors

The test for Wet Room Doors consists of a cyclic sprinkling of the opening surface of the door leaf takes place in a special test stand. Each of the 48 test cycles consist of 4 minutes spraying with "warm" water and 26 minutes of drying. After the test the door leaf is examined for effects on the general planarity, the water absorption and the moisture expansion as well as any visually detectable damages.

The usage of Wet Room Door sets for internal rooms and areas with an extremly high humidity. Examples for damp and wet rooms are for example in sanitary facilities, shower rooms, sauna areas and indoor swimming pools, sports halls, hospitals and hotels.

The door leaf construction (filling, edges and top layer) of Wet Room Doors does not consist of wood or wooden materials, but unexceptionally of moisture-resistant materials. As top layer only HPL sheets are used, because veneer would due to hygroscopicity (its characteristic to soak up water) macerate and therefore rip open the finish.

Function and installation

The Wet Room Door as well as the fittings must have wet room qualities, therefore a stainless steel frame, stainless steel hinges as well as a special lock with corrosion protection are recommended. A vision panel with plastic material glazing beads is of course possible as well.

Radiation door section

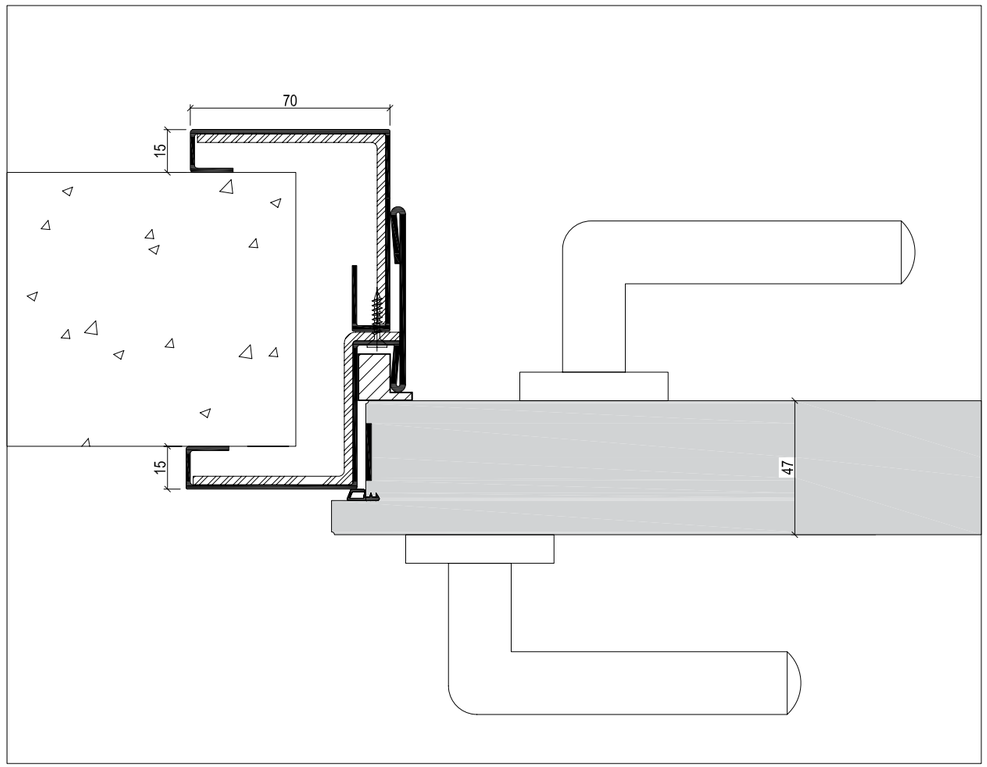

Radiation-Protection acc. to DIN 6834

Regulations and requirements

DIN 6834 Radiation-Protection-Doors

Radiation-Protection-Door sets, types 3 N and 16 N, are available with lead (Pb) inlay in the configuration as solid door, door with vision panel and door with top panel. They are mostly used in order to block x-rays, gamma rays and thermionic rays, preferably in medically used rooms, e.g. rooms for diagnostics and therapies.

The Radiation-Protection is achieved by including a lead inlay in the door leaf structure. The thickness of the lead inlay (in mm) is defined by the so called lead equivalent value according to DIN 6845. The lead equivalent value of a door is determined by the sum of the thickness of the two lead inlays in the door leaf.

The required lead equivalent value of a Radiation-Protection-Door is determined by the radiation protection plan according to DIN 6812, 6846 or 6847 for the construction of an according complex. The Radiation-Protection value of the door has to match the requiered lead equivalent value required to shield the radiation.

Function

Neither the fittings nor the special equipment must interfer with the doors function or lower the lead equivalent value. The use of lead glazings as vision panel and intercommunication glazing is according to DIN 6841 possible. According to DIN 6834 surface defects of the lead inlay, in the area of the handles and the keyhole drilling, are allowed as long as they are less than 2 mm of the lead equivalent. If the lead equivalent value is 2 mm or more every Radiation-Protection- Door must be equiped with a special lock with shifted follower and cylinder drilling. In general Radiation-Protection-Doors can be ordered with a lead equivalent value of up to 4 mm.

The radiation barrier of the door must not be disrupted by any angular radiation in the area of the door rebate and the wall connection. The radiation protection function of the door has to be verified by the manufacturer by attaching an official label on the edge of the door leaf.

Installation

The cavities between the steel frame and the wall has to be done either dry, by padding the cavities with wooden bars and lead strips or by filling the cavities with radiation protection mortar.

Combination with additional door functions

Sound-Insulation and Burglar-Protection

Radiation-Protection-Doors can be equipped with sound insulation and burglar protection function, but then these are the eponymous functions. For the possible performance range see the tables multiple functions.

Climate category II

The Dafadoor Radiation-Protection-Door meets the requirements for Climate category II. Due to constructive actions this door type is also available in Climate category III.

Climate category III

The Dafadoor Radiation-Protection-Door in special design meet the requirements for Climate category III.

Mechanical stress group

All solid doors in the range of Dafadoor Bullet-Resistant-Program by default meet the requirements of the Stress group S, therefore they resist static and dynamic deformation as well as hard and soft impact.

GENERAL INFORMATION

Configuration

Appearance of the door set

The appearance of a door set is mainly definrd by its surface. Dafadoor special doors meet the various requirements demanded by high-quality heavy-duty doors by offering a variety of different surface configurations. Independent of the door function the requests of the planner can be accounted for. Hereby it is possible to highlight and integrate the door set as creative instrument with its function as a passageway within the building.

The surface is part of the expressiveness of a door set and allows the planner to set architectural emphases in an individual and imaginative way.

Coating of door leaf and frame

Dafadoor offers high-quality industrially manufactured surfaces for door leafs (top layer) and wooden frames. Available options are:

- Veneer
- HPL
- Colour coatings
- Undercoating foil for on site coating (door leafs/wooden wrap-around frames)
- Untreated solid wood for on site surface treatment (solid wood door sets/steel frames)
- Special surface coatings

Furthermore it is possible that the surface treatment is carried out by the fabricator or interior contractor.

Besidesnan on site colour coating it is also possible to glaze and/or stain the veneer on site. If necessary the coating as well as the surface treatment of the doors (e. g. the staining etc.) can be carried out by the interior contractor/specialist. Hereby the processing directions defined in chapter 10.5 have to be followed.

Steel frames are delivered galvanized and undercoated. On request a powder coating in RAL or special colours is possible as well.

VENEER

Configuration

Wood is a natural product

Depending on the texture of the wood (commonly known as the wood grain) the veneer image is constructed. The wood grain is determined by the natural growth of the wood, growth abnormalities (e.g. pyramid, waler, root, or birds eye growth) and colour differentiations. Colour and grain depend on the single areas of origin of the different wood types. Therefore there are differences from stem to stem and even within the same stem.

One must be aware of the fact that there are natural features within the wood which are sometimes mistaken as faulty parts, but should rather be seen as characteristics.

Features of the natural product wood are for example structure, splint, light walers or irregular flames, irregularities of the grain, colour shadows within the stem, knots, knobs, splatters. Simply everything that belongs to the nature of the wood.

Just like humans, wood is a natural product and in nature no part resembles the other.

Types and configurations of veneer

In veneer construction there are several different possible layouts (horizontal, vertical, tangential) within the stem which determine the image of the grain. Veneers are classified according to their manufacturing process, knife-cut, rotary-cut or saw-cut veneer. Commercial quality veneers of various types of wood have a width of about 0,5 bis 0,7 mm, coniferous woods up to 0,9 mm.

The veener used to manufacture Dafadoor special doors and wooden frames are usually high-quality knife-cut veneers. Due to the manufacturing process of knife-cut veneers it is possible that shine and colour of the veneer sheets may vary, because different light breaking effects within the wood structure may occur (especially typical for

maple).

In order to coat large-scale door leafs the single veneer sheets are joint and glued in order to achieve a continous veener image.

Usually the single veneer sheets are **book matched**, which results in a pairwise mirrored veener image.

Veneers for door leafs are usually **figured**, whereas veneers for wooden frames and solid wooden frames are usually **striped**.

For stained surfaces the veneer can be **slip matched**, if the following surface treatment highlights the light and dark effects between the veneer sheets.

In order to achieve the appearance of a style door (solid wood framed door) the veneer sheets can be arranged **jointed on frames**, while the inner veener is configured in a bloomy style.

Clear coated surfaces

Veneered surfaces are by default transparently coated at Dafadoor. The used two component finishes produce a highly durable surface coating which is especially necessary in the area of high-quality heavy-duty doors. The finish is usually carried out in a environmentally friendly casting, rolling or spraying process which produces an appealing and homogeneous quality door surface.

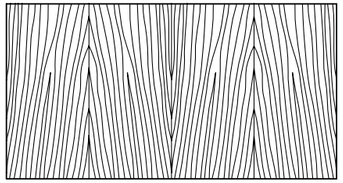

Veneer pattern book matched

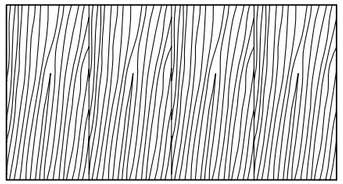

Veneer pattern slip matched

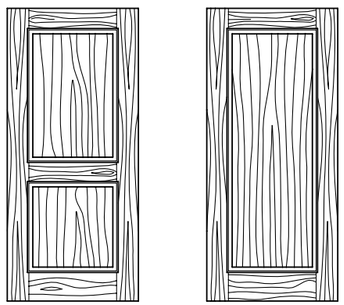

Veneer pattern jointed on frames

Stained surfaces

On request veneered doors and frames can be stained in certain colours and according to sample before being clear coated. Hereby different effects can be achieved, e.g. to increase the natural wooden grain or the more or less covering stain with which a wide equalization can be achieved. Due to the different absorbtion capacities of the cells wood specific stain tones of particular luminosity and depth effect are achieved without distroying the actual character of the wood.

Colour coated surfaces

With a colour coating with pigmented polyurethane lacquers (e.g. RAL- or NCS- colours) the pattern and grain of a wooden surface can be accentuated without obtaining the colour of the original wood. Hereby one distinguishes between open porous and partially closed porous coatings. This surface finish is usually used for large-pored wood types, such as for example ash or oak.

Untreated surfaces

If to be finished by a specialist/fabricator the veneered doors and frames can be delivered in untreated state (raw) if necessary. When finished on site the door set has to be finish grinded. Hereby the according processing directions have to be followed.

On site coating

In order to be finished on site, either with veneer respectively HPL or an on site coating the door leaf surface is coated with undercoating foil, which just has to be lightly grinded before being processed any further. On request and for additional charge the door leaf can also be veneered horizontally in preperation for further on site processing. On site processings, such as the above mentioned coating or on site surface finishing, e.g. grinding, colour coating, glazing, staining etc., are by basic principle to be carried out by a

specialist (carpenter, interior contractor, painter).

COLOUR COATING

Configuration

Individual surfaces

Dafadoor special doors can be fully colour-coated due to state-of-the-art technology. Hereby the surface finish covers the whole door set, including optional glazing crossbars, door leaf edges and the wooden frames.

The range of colours is based on the most popular colour schemes RAL or NCS. Due to newest computer-aided processes the surfaces of provided samples can be measured and spectroscopic analysed in order to meet the exact colour tone requested.

The basis for a smooth surface and fundament for following coating finishes is a undercoating foil made of melamine resin.

On site finishes

In order to provide a good basis for a specialist to carry out the surface finishing, on site coating or the applying of veneer or HPL, the top layer of Dafadoor special doors is by default covered with an undercoating foil .

This enables the specialist/fabricator to complete the finish on site with commercial lacquer systems. For the surface finish only permanent PVC laquer systems are to be used. In any case the factory coating has to be grinded and primed if necessary. Drawdowns have to be carried out on site.

The processing directions in chapter 10.5 have to be followed.

HPL

Configuration

Decorative high pressure laminate

HPL (high pressure laminate) consists of cellulose, phenol and melamine resin and is a decorative high pressure laminate for the interior design. The decorative layer of printed on or coloured paper is covered in melamine resin and forms a solid bond under high pressure and heat.

The HPL surface is characterised by a nonporous, sealed melamine resin surface. This characteristic recommends the use of this material in areas in which a good cleanability is required. It was proved by extensive clinical tests that bacteria and fungus populations have a high die off ratio on HPL surfaces. The good hygenic characteristics of the HPL surface is supplemented by its antistatic effect, by which no dust is attracted or bound. The pigments of

the decorative paper used to produce HPL do not include cadmium nor any other heavy metal compounds. The generally good surface characteristics lead to the fact that HPL is categorised as physiologically harmless in contact with food, therefore it is recommended for the use as surface finish of kitchen worktops, tables or frequently used heavy-duty doors.

Approved according to DIN EN 438 and DIN 16926 the surfaces reach a relatively high abrasion, scratch and shock resistance. Colour, design and pattern result in the desired optical effect and need to be chosen very carefully and, according to the manufacturer, be described accurately.

Chosen can be from so called unicolour decors, photographic technically produced wood reproductions and HPL (genuine wood configuration). Additionally special effect surfaces with metallic coating and special patterns have to be mentioned.

Depending on the manufacturer different HPL thicknesses have to be taken into account and have to be stated at the time of the order.

Dafadoor doors, wooden wrap-around, wooden block and on request solid wooden frames can be coated with the collection of leading HPL manufacturers such as Resopal, Perstorp, Duropal, Thermopal, Max-Schichtstoffe, Abet-Laminati, Getalit, etc.

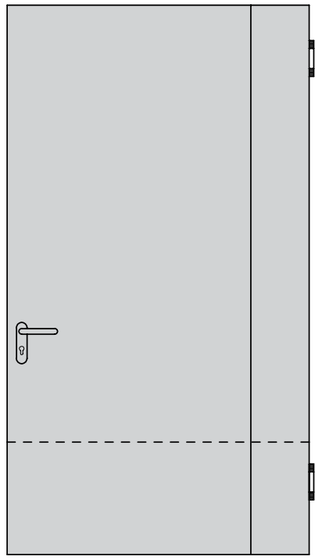

Dafadoor Wet Room Door sets, which are usually exposed to steam and splash water, are generally manufactured on the basis of plastic material and coated with an at least 0,8 mm thick HPL layer.

Due to new processing methods also continuously manufactured high pressure laminates (CPL) can be processed as top layer, whereas the highly stressable characteristics of the 0,8 mm thick HPL surface can not be reached due to the thickness of just 0,4 mm.

The selection and the individual technical details of the HPL required for the building project have to be gathered by the planner from the current collections and technical descriptions of the individual manufacturer. Hereby special attention has to be paid to the availability and especially the required formats of the storage programs and door collections.

Due to the actuality, samples have to be requested from the individual manufacturer.

HPL sheets in door format are availabe in delimited dimensions. Therefore it might be necessary to abut the sheets for large door set surfaces. The butt joint can run vertically or horizontally on the door leaf surface. For high door sets it might even be necessary to abut the surface material in length.

Some HPL manufacturers offer HPL sheets in oversizes which exeed the door formats. Due to the fact that this depends on the manufacturer as well as the surface and its pattern it is recommended to contact the factory. It is especially recommended for questions concerning availability, production times and prices of nonstandard dimensions.

DIN norms for hinges

Door hinges, hinge reference line DIN 18268

Hinges for fire protection doors DIN 18272

Door hinges DIN EN 1935

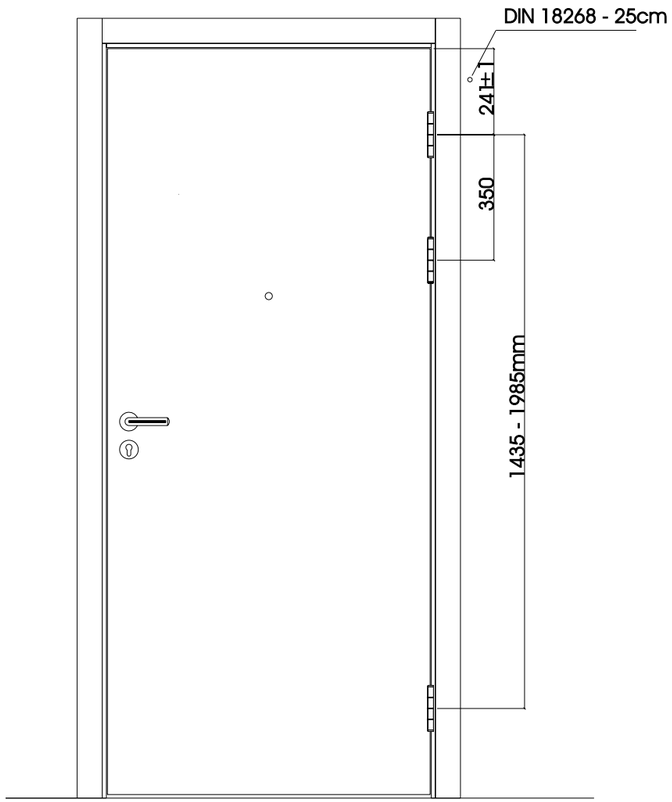

Hinges types

Unrebated hinge

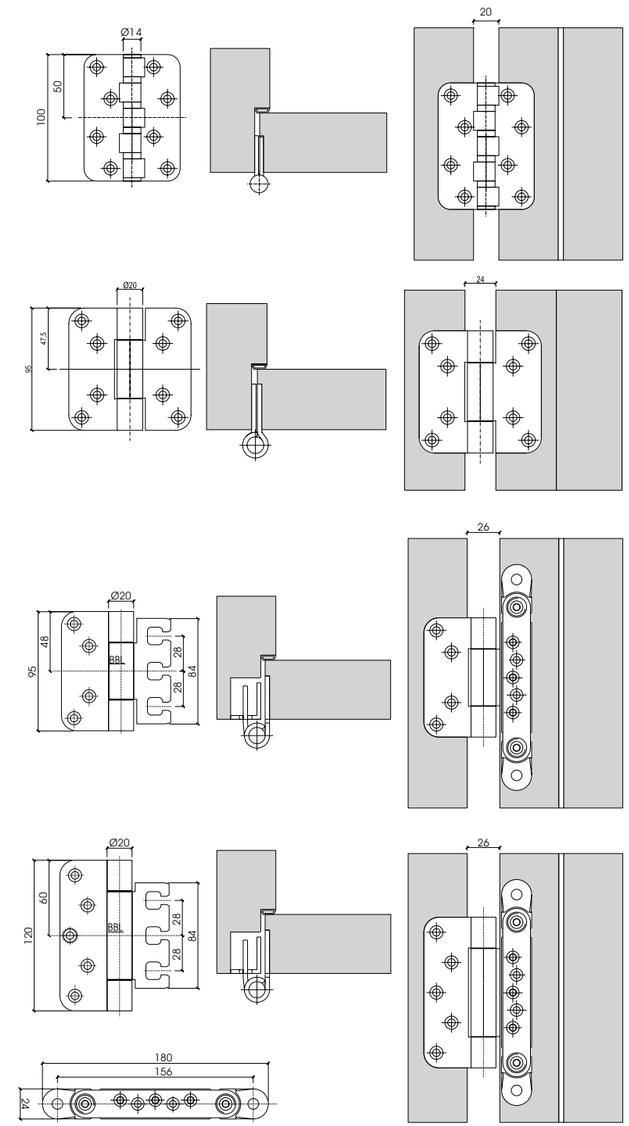

Rebated hingle

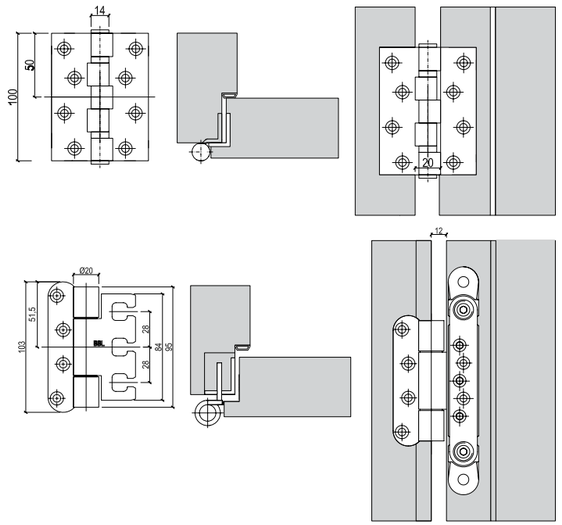

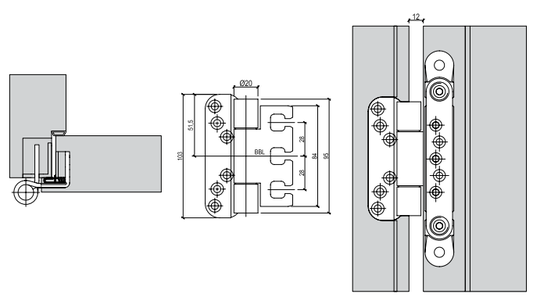

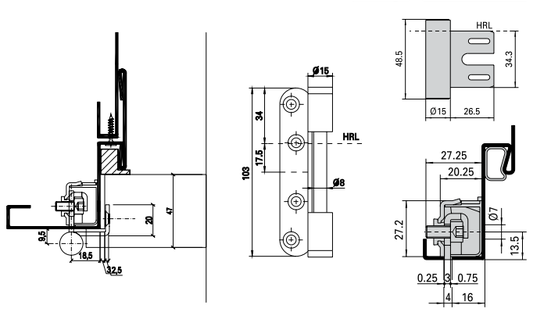

Spring hinge

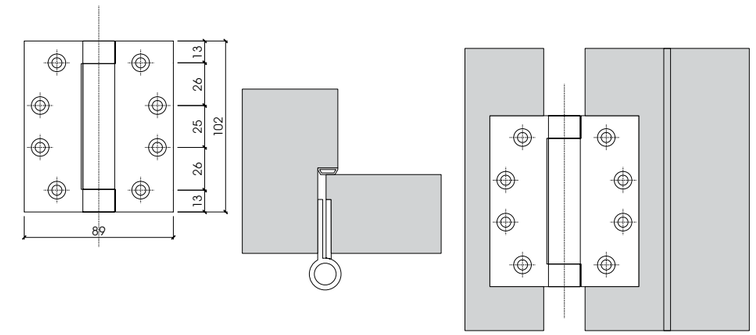

Swing hinge

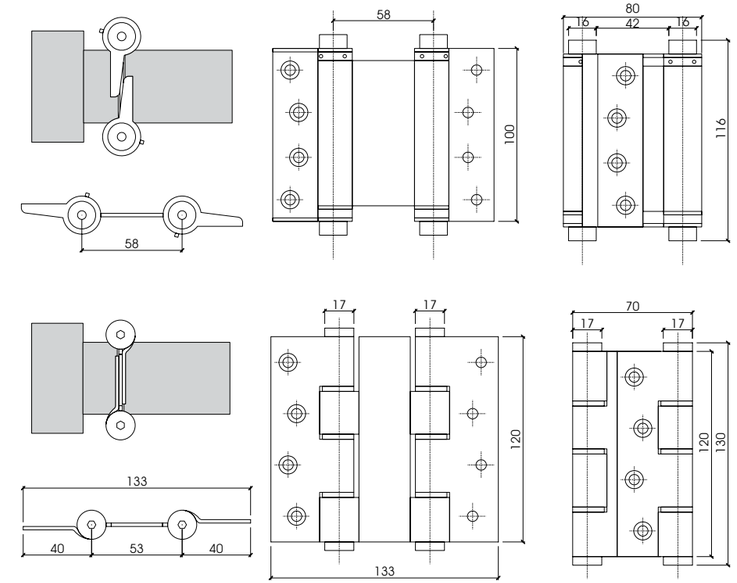

Concealed hinge

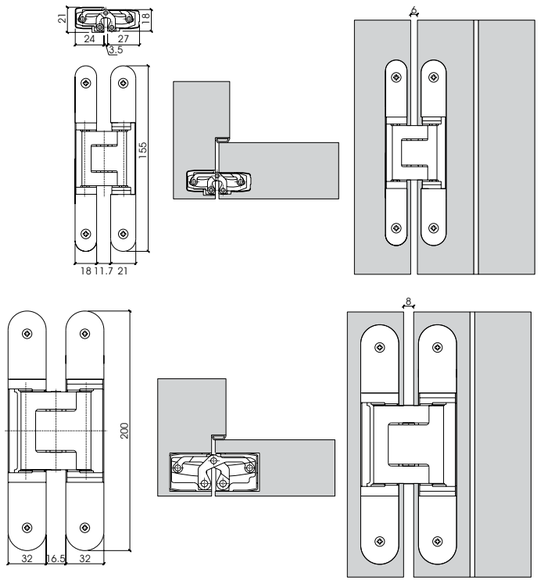

Glass door hinge

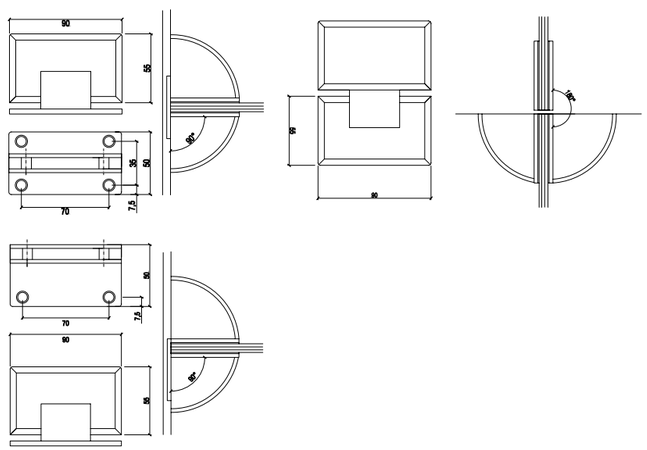

LOCKS

Locks According to DIN 18251 and DIN 18250 respectively DIN EIN 12209

General information

DIN 18251 / DIN 18250

Function

For catching and bolting of doors in the frame, mortise locks with latch and bolt are used. The latch keeps the door shut, while the bolt, when in locked position, prevents the unauthorised entry. Depending on the door function and field of application different lock configurations according to DIN 18251 (mortise locks for doors) and DIN 18250 (mortise locks for fire protection closures) are used, they can be equipped with additional functions, such as panic

functions.

Locks for the use in Fire- and Smoke-Protection-Doors underlie a special test and control code, which is regulated in DIN 18250, during their production. These locks are permanently labeled on the backset with the compliance label (Ü), corporate mark and type, production year as well as if applicable special function as for example panic function.

In order to assure the intended use the right combination of approved fittings (e.g. key and cylinder), as well as accessories (e.g. strike plate) is needed for the installation.

Profile cylinder lock (PZ)

Prepared for the installation of profile cylinders according to DIN 18252 (locking cylinders for door locks), the PZ-lock with profile cylinder (according to DIN 18254) is the standard for todays heavy-duty doors. By turning the key twice the bolt is locked. Besides the regular PZ-perforation also locks for round- and oval-shaped cylinders are available.

Warded lock (BB)

Apartment doors are usually equipped with warded locks they can be locked in either one or two turns and with various key shapes. If Fire-Protection-Doors with BB-perforation are requested, PZ-locks with special warded lock insert are used. the use in Smoke-Protection-Doors is not allowed and not recommended in highly sound-deadening doors.

Lock for bathroom doors (BAD)

Locks for bathroom doors do only need to be turned once to lock the door with a spindle.

DIN EN 12209

DIN EN 12209 defines requirements and test procedures for the long-term durability test, stability, protection effect and the mode of action of mechanically operated locks and their strike plates for the European market, which are inserted in doors, French doors and entrance doors.

If locks and strike plates are to be inserted in Fire-Protection- and/or Smoke-Protection-Doors additional characteristics are necessary in order to meet the basic requirements "safety in the case of fire", either independently or as a part of a complete door set. In appendix A additional requirements for locks and strike plates for Fire-Protection- and/or Smoke-Protection-Doors are defined.

Locks According to DIN 18251 and DIN 18250

Requirements and additional functions

Requirements

Locks of class 1 or class 2 are inserted in doors with low or medium requirements and quality. The medium-heavy interior door lock class 3 is predominantly used for heavy-duty doors. Locks of class 3 need to pass a long-term durability test with 200.000 operations of the latch function and 50.000 operations of the bolt function.

All Dafadoor special doors are equipped with locks of at least class 3.

Locks of class 4 are so called agency locks. These locks are used for doors with high user frequency or for doors with burglar-protection function. The long-term durability test consists of 500.000 operations of the latch function and 100.000 operations of the bolt function.

Latch function (W)

In order to be able to retract the latch with the key (without handle operation), locks with so called latch function are used. Especially for apartment entrance doors with one-sided handle (knob/lever combination) the unauthorised entering, while not bolted, can be prevented.

Narrow style locks

For doors with narrow friezes (< 120 mm), as for example solid wood framed doors, **narrow style locks** are used. Due to missing national (DIN) and European standards (EN) the dimensions of the locks are based on factory standards according to DIN 18250 and 18251.

Panic locks

Locks of class 3 and 4 according to DIN 18251 and 18250 can be equipped with panic function. These so called **panic locks** enable an unhindered opening, in the predetermined escape direction, of the closed and bolted doors of the escape routes .

Self-bolting panic locks

In order to meet the security requirements, according to the type and use of the building, **self-bolting panic locks** are a suitable option. These locks, often used in apartment interior doors or escape doors, lock the bolt either by activating a supporting latch or a special mechanism on the main latch when the door is closed.

Multiple bolting device

Doors with burglar-protection function, according to their resistance class (WK 2 or WK 3) are equipped with locks with **multiple bolting devices**. Besides of the bolt at the main lock, two additional bolts of the secondary locks catch and increase the attack-resisting function of the door.

Radiation-Protection locks

Radiation-Protection-Doors with a lead equivalent value ≥ 2 mm require a **Radiation-Protection lock** with shifted follower and PZ-perforation. Therefore the backset is different on push and pull side (40/80).

Corrosion-resistant locks

Wet Room Doors need to be, due to the climate stress in areas with high humidity, equipped with **corrosion-resistant locks** according to DIN 18251.

According to DIN 18251 and DIN 18250

Configurations and dimensions

Standard lock

The surface of the **forend** is available either as galvanised steel, stainless steel or with special surface finishes (e.g. brass-plated, chrome-plated, gold-plated).

The **forend width** for Dafadoor doors is 20 mm for the standard rebate and 24 mm for rebated and unrebated door leaf configurations.

Latch and bolt of locks (class 3 and 4) are by default in galvanised metal configuration, on request also available nickel-plated.

The follower of locks according to DIN 18250, for Fire- and Smoke-Protection-Doors, needs to be dimensioned for carrying a **9 mm square-cut spindle**.

Characteristic measures for the description of a lock and the position of spindle to PZperforation are the **backset** and the **centre distance**. The standard dimension of the backset is 65 mm, because then a minimum remains between frame jamb and lever respectively knob for its use. Depending on the lock function the backset dimensions are also available in 55, 80 and 100 mm. The centre distance between the spindle and PZ-perforation is 72 mm.

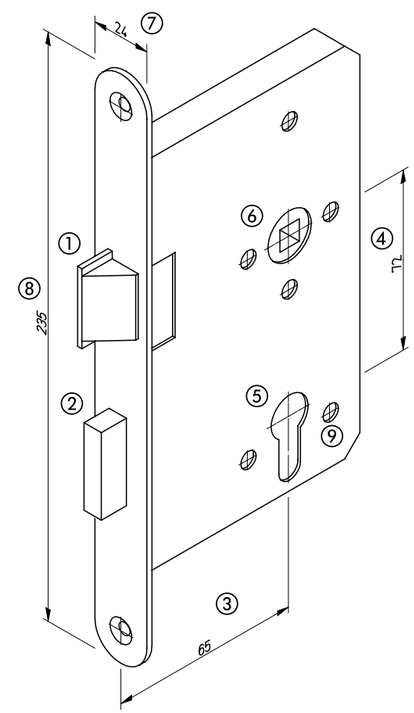

1. Latch
2. Bolt
3. Backset
4. Centre distance
5. PZ-perforation
6. Follower
7. Forend width
8. Forend length
9. Fixing for rosettes

Narrow style lock

Configurations and dimensions

Narrow style lock

Narrow style locks are needed for doors with extremly narrow friezes (< 120 mm). Due to missing national (DIN) and European standards (EN) the dimensions of the locks are based on factory standards. Narrow style locks are also available with panic function. By default the backset is 45 mm, the centre distance 92 mm and the forend length 270 mm. The forend width measures 24 mm.

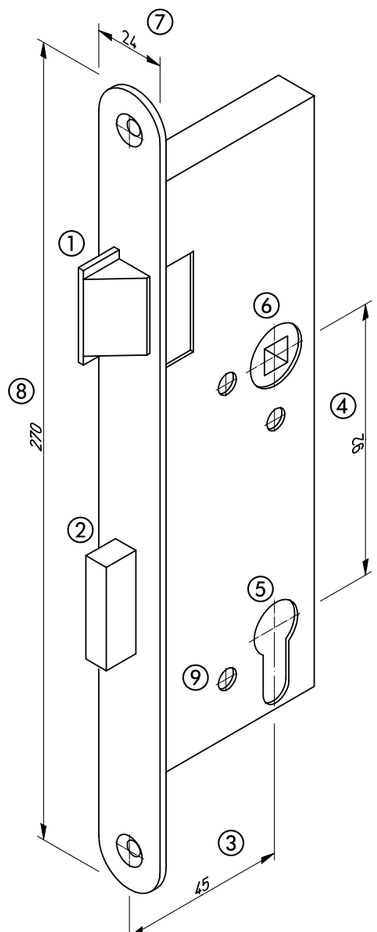

① Latch

② Bolt

③ Backset

④ Centre distance

⑤ PZ-perforation

⑥ Follower

⑦ Forend width

⑧ Forend length

⑨ Fixing for rosettes

Radiation-Protection lock

According to DIN 6834

The lead inlays in Radiation-Protection-Doors can not guarantee 100% Radiation-Protection in the areas of the drillings for the handles and the keyhole. According to DIN 6834 surface defects of the lead inlay in these areas are allowed up to a lead equivalent of less than 2 mm. If the lead equivalent value is 2 mm or more every Radiation-Protection-Door must be equipped with a special lock with shifted follower and PZ-perforation. The backset measures 40 respectively 80 mm.

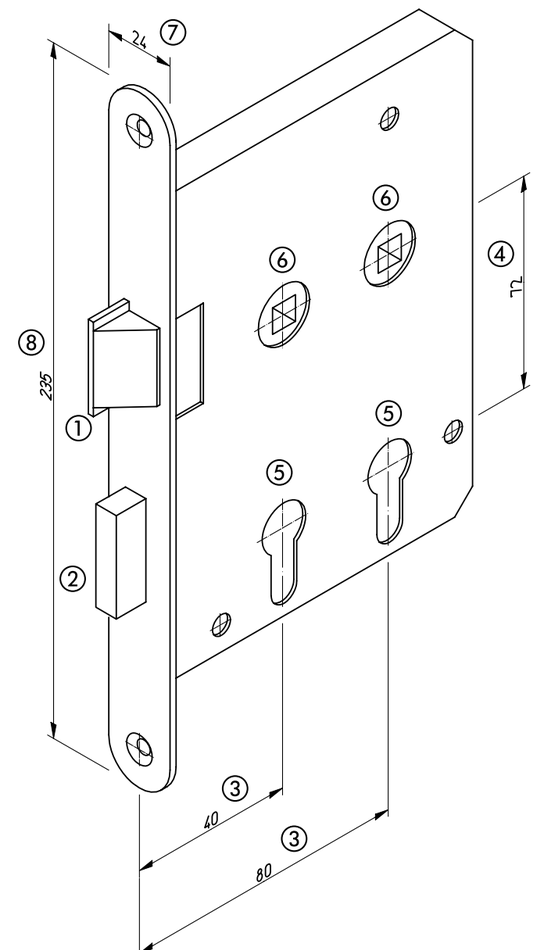

① Latch

② Bolt

③ Backset

④ Centre distance

⑤ PZ-perforation

⑥ Follower

⑦ Forend width

⑧ Forend length

Lock types

Cylinder Sashlock

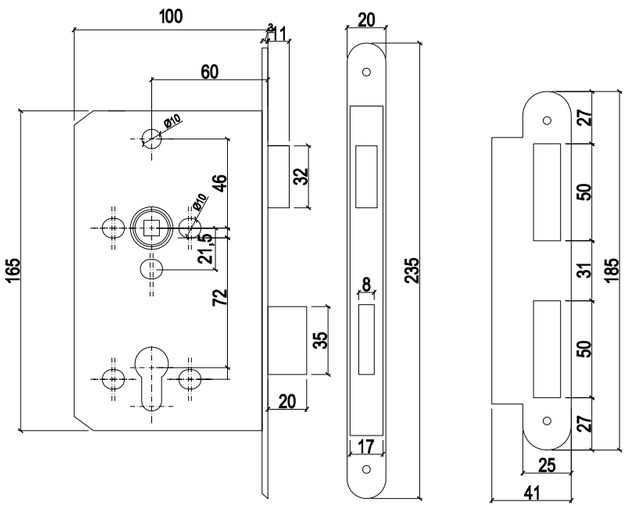

Room Lock

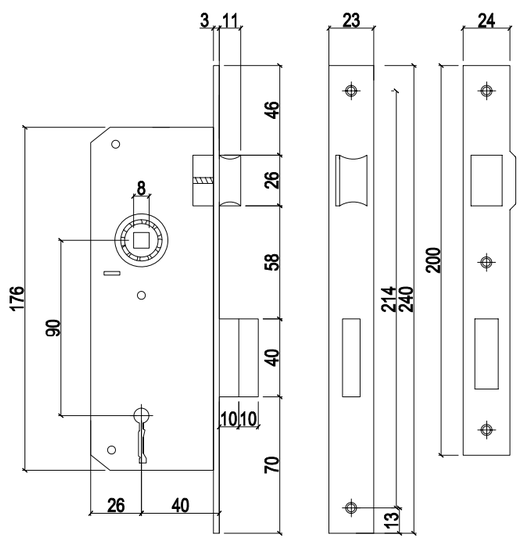

Bathroom Lock

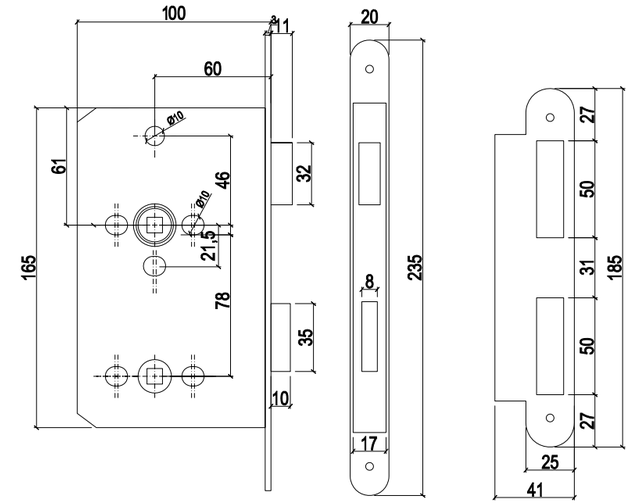

Latch Lock

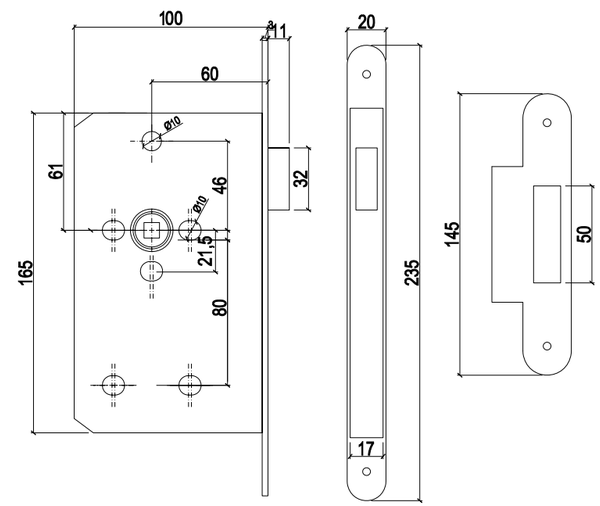

Panic Lock

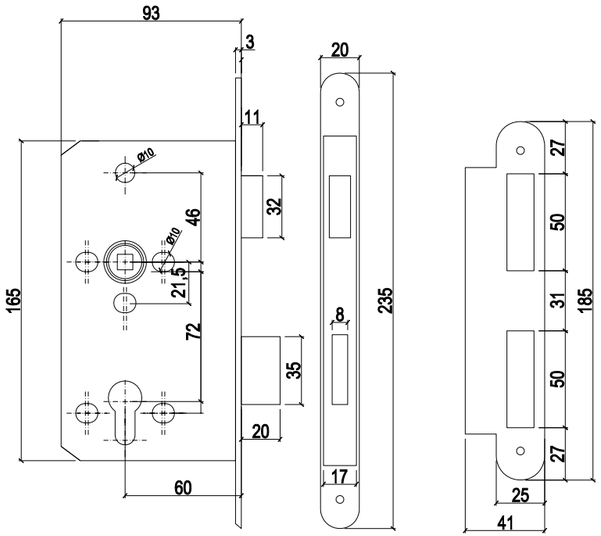

Swing Door Lock

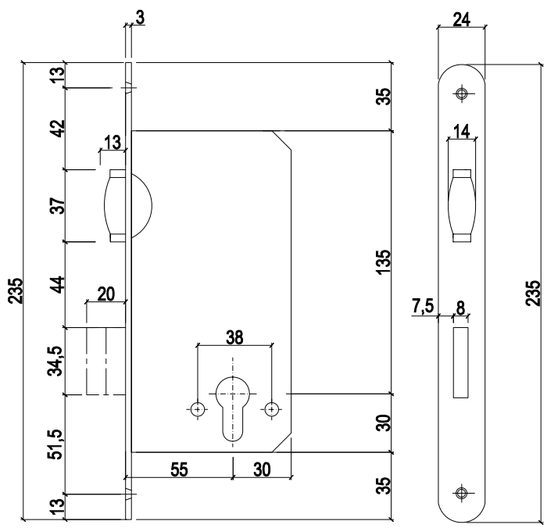

Sliding Door Lock

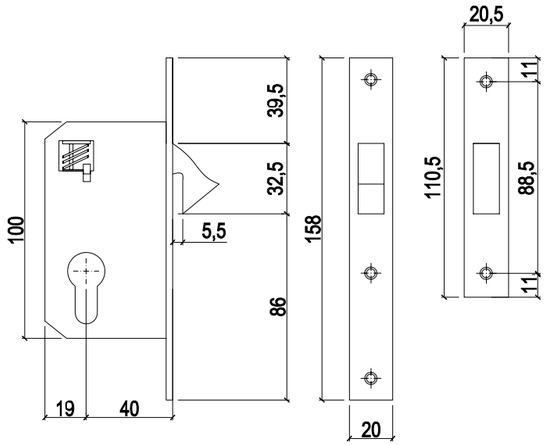

Knob lock

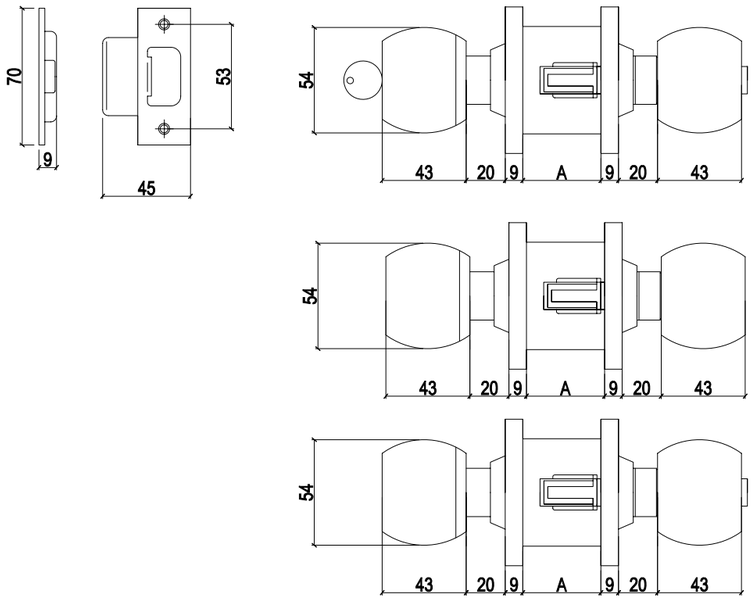

Multisystem Lock

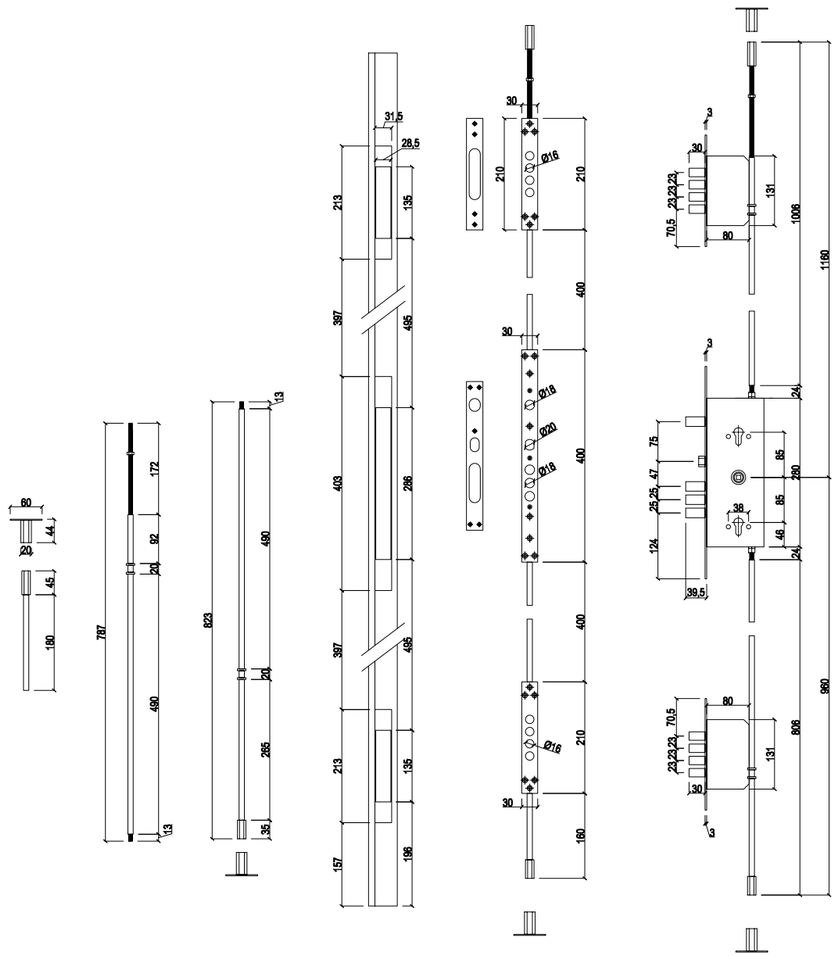

Radiation Lock

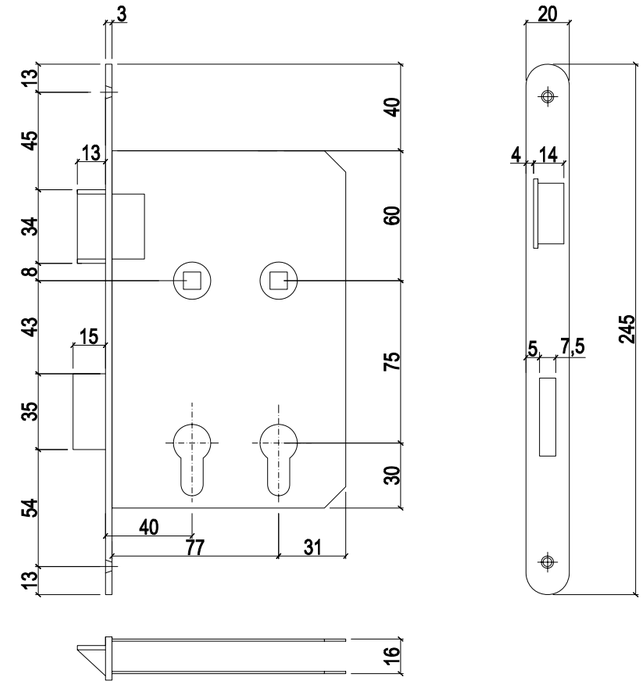

Glass Door Lock

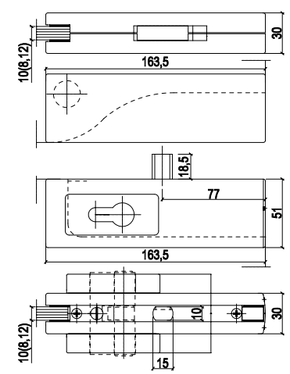

Glass Door Lock and Striking Plate

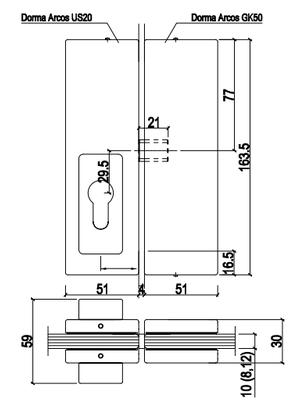

HANDLES

Configurations

Function

A door is operated by a lever or knob, which is directly connected to the lock by spindle and follower. By pushing the lever down and so retracting the latch, the door can be opened by hand. mong its main function to open and close doors, the handle set, in combination with the hinges, turned out to be more and more important in the means of design for the private and public construction sector in recent years. Today, depending on the taste of the customer, handle sets are availabe in simple design to the point of eccentric creations of famous designers and architects.

Technical terms

Terms, dimensions and requirements of door handles are defined by DIN 18255, 18273 and 18257. In the following drawing the single components and parts of a handle set are illustrated.

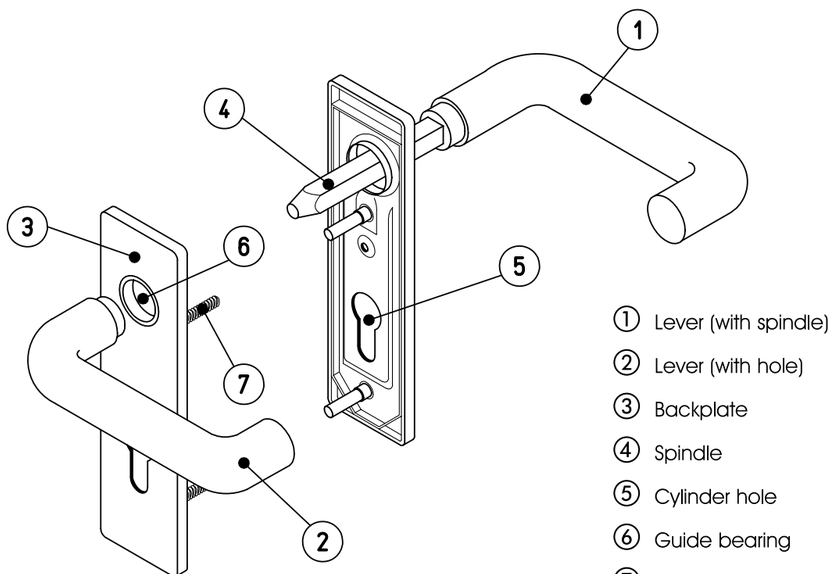

① Lever (with spindle)
② Lever (with hole)
③ Backplate
④ Spindle
⑤ Cylinder hole
⑥ Guide bearing
⑦ Fastening screw

Handles, backplates and rosettes

Terms, dimensions and requirements are defined by DIN standards. Regarding the frequency of use of heavy-duty doors, e.g. in public buildings, administrations, hospitals, schools and universities, banks and demanding domestic building projects, handle sets are subject to long-term durability and fire protection testings, depending on the requirements and functions.

Using manufacturer specific constructions, concerning the guide bearing of the handles, it is assured that frequently used doors are able to absorb the energies during the opening and closing operations. In order to assure a long service life an installation according to the manufacturer directions is recommended.

Height of the handles

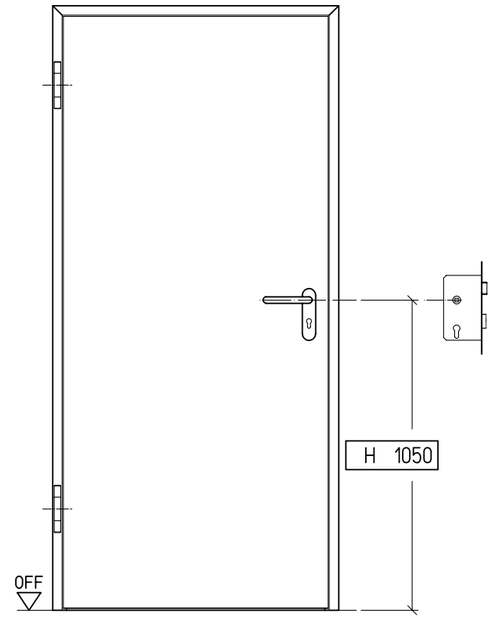

The height of the door handles (DH) is, according to DIN 18101, 1050 mm measured from the surface of the finished floor.

Differing heights are possible. Also for Fire- and Smoke-Protection-Doors the height of the handels can vary from 850 mm to 1250 mm.

The desired height of the handles (measured from the lower frame rebate) for 4-sided frames and especially for flaps has to be indicated.

Shape, material and surface

Door handle sets are described according to their cross-section, as for example round- or ovalshaped handles, but also according to their geometrical shapes, e.g. as U-shaped, L-shaped, flat-shaped, or described as semicircular shaped etc. Other handles are named after their production site e.g. Bauhaus-Handles or after their designers. Usually the various handle shapes can be combined with backplates, such as short backplate, long backplate or rectangular backplates of any kind of shape as well as with rosettes.

The appearance of a handle set is furthermore determined by the choice of material and the surface finish. Besides aluminium and plastic material as well as stainless steel and brass handle sets, also combinations of the materials metal/wood and metal/plastic material are possible. Aluminium handles can be coated with various eloxal colourings, stainless steel handles are available either matt or polished. Plastic material handles are available in various colourings.

Note: For the pull bars the height is 1100 cm.

According to DIN 18255

Terms and requirements

Knob-lever set

Differing from panic function, for example apartment entrance doors can be equipped with a door knob on the outside. For this purpose a lock with panic function E, with which it is possible to retract the latch by turning the key, is necessary, as well as a knob-lever handle set.

Handle set for inactive leafs

In case that the inactive leaf of 2-leaf door sets should be equipped with a handle set, the installation of a so called handle set for inactive leafs in combination with a shot-bolt lock is necessary. This handle set, also known as one-sided handle set, describes a handle set with spindle, backplate or rosette as well as a counter blind backplate or blind rosette.

Due to the fact that this handle set is usually just necessary for 2-leaf door sets with full panic function (panic function on both leafs), Dafadoor special doors are by default not equipped with a one-sided handle set, but with a concealed shot-bolt lock. In this case, the opening of the inactive leaf can only take place, if the active leaf is opened and by operating a retractable lever in the door leaf edge. Alternatively also an inactive leaf bolting, type DORMA HZ, can be used.

Panic handle set

Doors in escape and rescue routes are equipped with panic function. The installation of these handle sets, usually called panic handles, is only effective, if combined with panic locks. Constructively, handles are differentiated between lever/lever sets (function B, C or D) with split spindle and knob-lever sets (function E) with one-sided fixed knob.

If equipped with panic function the door can be either equipped with a lever/lever set respectively knob-lever set, or also with an approved panic crossbar/push crossbar set on the push side, or on pull side with a one-sided fixed knob or a handle set.

Sports hall handles (flush)

According to special regulations regarding the configuration of sports facilities, doors have to be equipped with flush or just slightly projecting handles. Thereby the risk of injury should be precluded.

The installation of such a door handle set is also recommended for other areas, such as multipurpose halls or for fixed doors in wall recesses, where the door handle should not project into the hallway respectively the escape route.

More details about the various handle set configurations can be found on the following pages.

According to DIN 18257 and DIN 18273

Terms and requirements

Fire protection handle sets

Handle sets according to DIN 18273 are part of Fire- and Smoke-Protection-Door sets and therefore underlie the requirements of DIN 4102 part 5 and part 18. They have to undergo, just as functional doors, long-term durability and fire protection testings. Fire protection handles (Fire-Protection handles) need to be equipped with a square-cut spindle, diameter 9 mm. Handle sets made of materials with a melting point ≤ 1000 °C has to contain a steel core which is connected with the spindle and which extends 80 mm into the lever.

Fire protection handles for Fire- and Smoke-Protection-Doors are part of the approval respectively the test certificate and therefore need to be included in the delivery set of the door manufacturer. They can be delivered either as lever/lever or as lever/fixed knob handle set. Dafadoor Fire- and Smoke-Protection-Doors are by default equipped with a plastic material handle set in U-shape (lever/lever) with short backplate.

Security fittings

Burglar-Protection-Doors need to be equipped with solid security fittings in different resistance classes according to DIN 18257. According to the door function WK 2 or WK 3 adequate security fittings in the resistance classes ES 1 or ES 2 need to be used. Due to their construction security fittings hinder the forcibly twisting off of the profile cylinder and therefore a direct attack on the lock area.

In order to successfully hinder a pulling out of the profile cylinder, many security fittings are equipped with a pull protection. This cylinder faceplate (ZA), made of especially hardened metal should additionally prevent attacking respectively drilling of the cylinder.

For Burglar-Protection-Doors with a test certificate according to DIN V ENV 1627 an approved security lever/knob set has to be used.

One-sided fixed knob

Standard (ES 2)

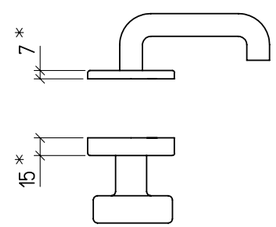

Depending on the model

Configuration versions

Handles and backplate forms

Standard U-shape
Short backplate

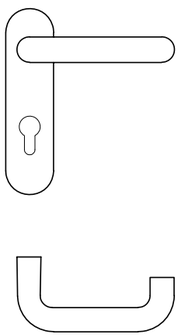

L-shape
Short backplate

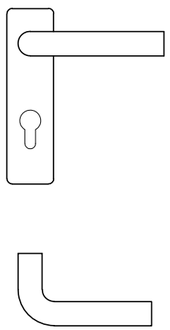

U-shape
Long backplate

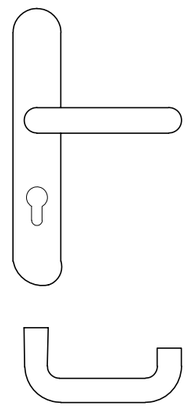

Special-shape
Rosette

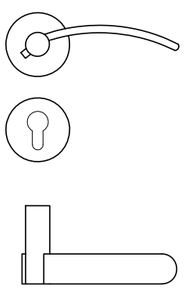

Semicircular-shape
Rectangular backplate

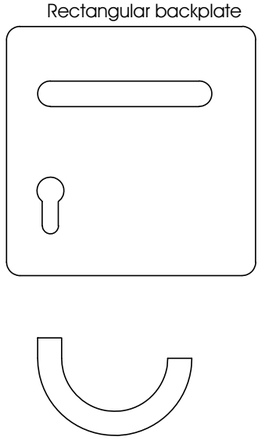

Knob-lever set

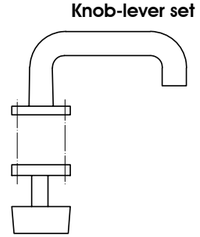

The displayed lever and backplate shapes show possible combinations which are available in different configurations according to the manufacturer. For handle configurations with rectangular backplate in combination with doors and vision panels a minimum frieze width of 240 mm is necessary.

Dafadoor special doors are on request available with door viewer. Exceptions are Bullet-Resistant-Doors and Radiation-Protection-Doors.

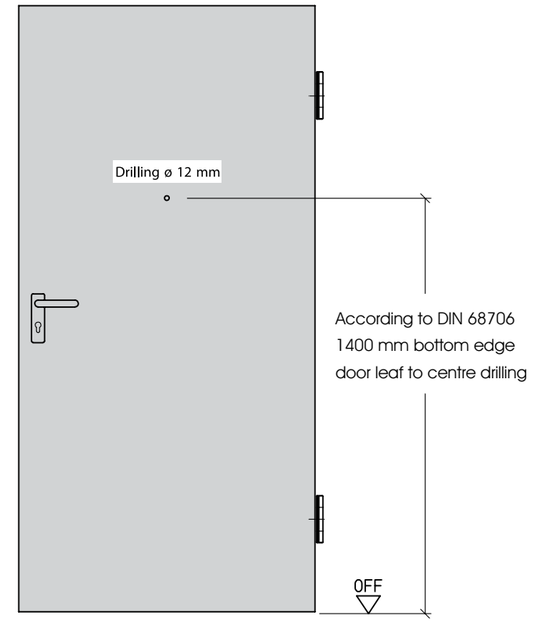

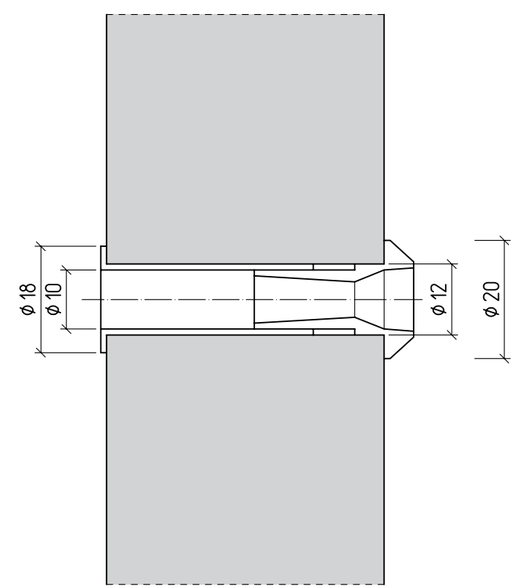

The lenses of the door viewer are available in different angles of vision. By default the angle of vision is 180°, on request the door viewers can be equipped with lenses of 200° angle of vision and covering cap.

The position of the door viewer is defined, according to DIN 68706, to a height of 1400 mm from the bottom edge of the door leaf to the centre of the drilling. Differing positions are available on request.

RETRACTABLE BOTTOM SEALS

field of applications

All Dafadoor special doors (except Wet Room Doors) can be equipped with retractable bottom seals.

Smoke-Protection-Doors, approved according to DIN 18095, have to be equipped with a bottom seal. The installation of retractable bottom seals for Fire- and Smoke-Protection-Doors is only permitted for the door manufacturer. Fire-Protection-Doors with bottom seal must not be shortened on site.

If doors are equipped with retractable bottom seals in order to meet sound-insulation requirements, the use of thresholds (e.g. aluminum rails) and a floor disjunction (disjunction joint) is recommended. Carpets and also flat uneven floor coverings underneath the door leaf edge can seriously decrease the sound-deadening function of the door set.

Retractable bottom seal

1-leaf doors

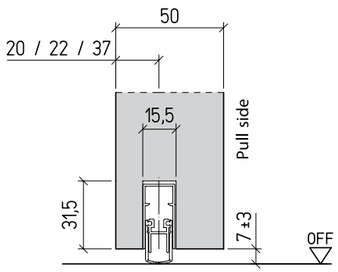

2-leaf doors

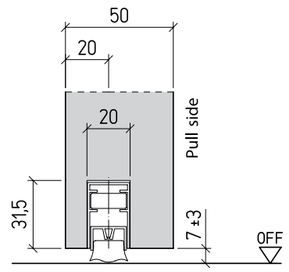

20 mm for rebated door leaf
22 mm for unrebated door leaf
37 mm for unrebated door leaf with jamb rebate

Sound-Insulation Rw,P 37 dB

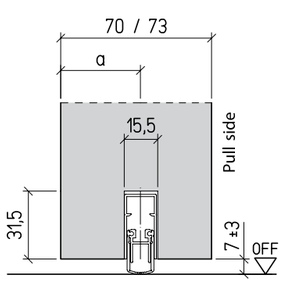

Sound-Insulation Rw,P 37 dB

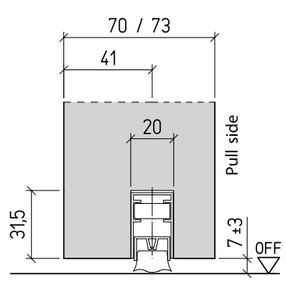

a = Tst 70: 37 mm for rebated door leaf
43 mm for unrebated door leaf with jamb rebate
45 mm for unrebated door leaf with jamb rebate
38 mm for unrebated door leaf with double jamb rebate
a = Tst 73: 44 mm for unrebated door leaf with jamb rebate and DIN-lock
42 mm for unrebated door leaf with jamb rebate and RR-lock
37 mm for rebated door leaf and DIN-lock
35 mm for rebated door leaf and RR-lock

Sound-Insulation Rw,P 42 dB/45 dB

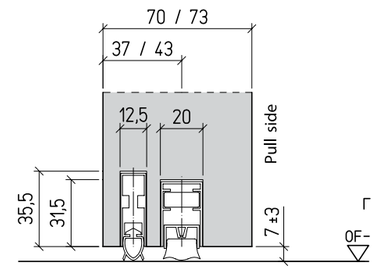

37 mm for 2-leaf door
37 mm for rebated 1-leaf door
43 mm for unrebated 1-leaf door

Sound-Insulation Rw,P 48 dB

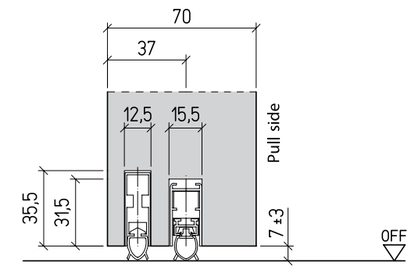

Sound-Insulation Rw,P 32 dB and 37 dBT
ype 5 Type 10 N/ 20 N

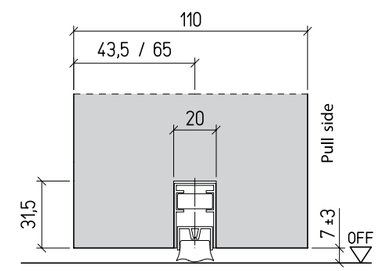

Sound-Insulation Rw,P 42 dB

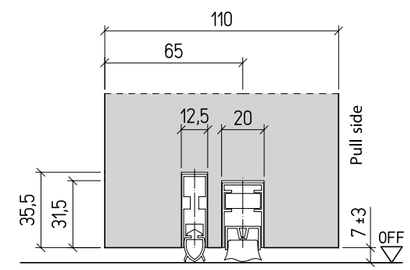

Sill seal with twin sealing strip
with threshold trim (aluminium)

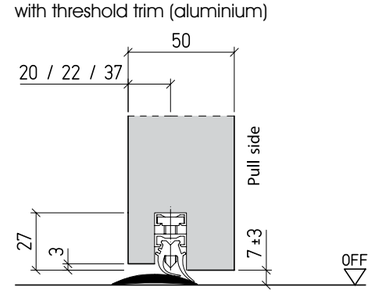

20 mm for rebated door leaf
22 mm for unrebated door leaf
37 mm for unrebated door leaf with jamb rebate

Configuration with disjunction of the screed or disjunction threshold

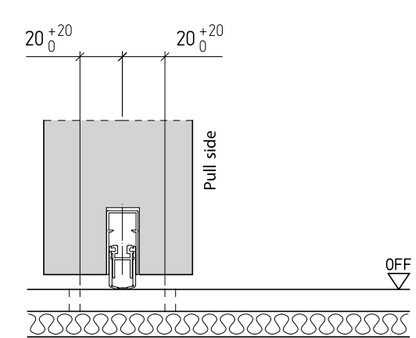

KICK AND PUSH PLATES

Surface and edge protection

In order to prevent surface or edge damage on the highly used ares of doors, stainless steel or aluminium kick plates are installed. By default kick plates with a thickness of 1,0 mm are glued to the finished door surface. On request they can be screw fastened in addition. Alternatively to mounting the kick plates on top of the finished surface, they can also be mounted flush and slotted to the door surface. According to the DIBt a mounting of strips of metal sheet on the door surface up to a height of and width of about 250 mm is allowed.

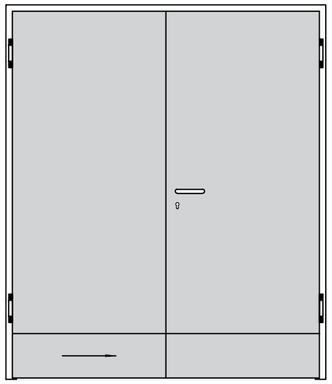

with kick plate

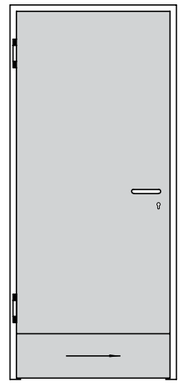

with kick plate

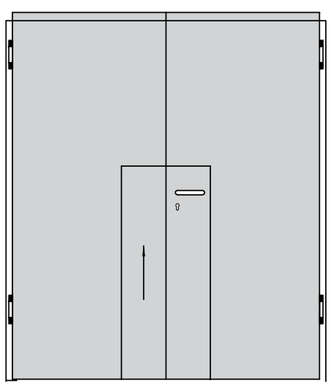

with push plate

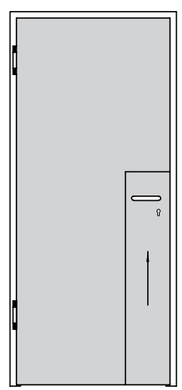

with push plate

Grinding direction

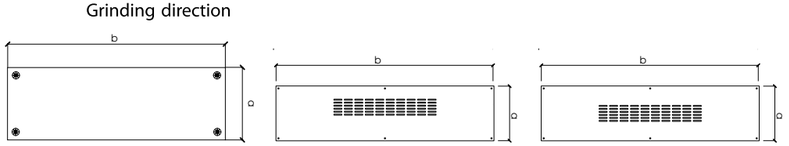

VENTILATION GRILLE

Ventilation grille

For the ventilation of closed rooms without a ventilation possibility, as for example Damp Rooms and kitchen etc., ventilation grilles can be inserted in doors. The dimension of the grille as well as the open cross section are subject to the necessary air change rate of the room.

The installation of a ventilation grille is usually just done in Wet Room and Solid Core Doors.

The installation in Fire- and Smoke-Protection-Doors is not permitted.

The position and size of a ventilation grille is suggested in DIN 68706. Differing configurations are possible as long as a minimum frize width is kept.

Mail slot

Apartment doors can be equipped with an additional mail slot. The installation height is according to DIN 68706 by default about 850 mm from the bottom leaf of the door leaf to the mail slot. Mail slots can on request only be installed in Solid Core Doors.

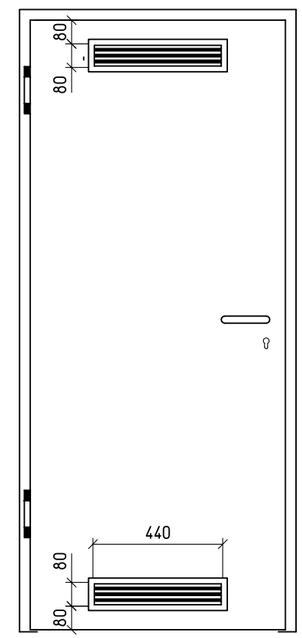

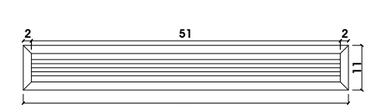

ESCAPE DOOR SYSTEMS

Panic doors

Panic doors according to DIN EN 1125 are designed for public buildings whose visitors and users do not know the function of the escape doors and who need to be able to use the emergency exits without being instructed. This applies for example for hospitals, schools, public administrations, airports and shopping centres.

The release forces for panic doors are regulated as well. In two different procedures the locking system is tested, on the one hand the door set is tested without initial load. With an operating force of at most 80 N the door should open automatically. During the second procedure an initial force of 1000 N affects the door leaf. Hereby the operating force should not exceed 220 N.

On the escape side of panic doors crossbar handles or push crossbars, which extend across the whole width of the door set, are compulsory. On the outside according lever, knob or blind backplates have to be installed. The handles on the outside and the mounting accessories are also a certified part of the fittings.

Panic crossbar

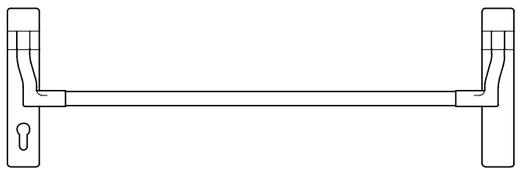

Push crossbar

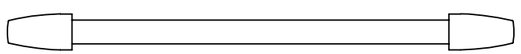

Maximum operating force

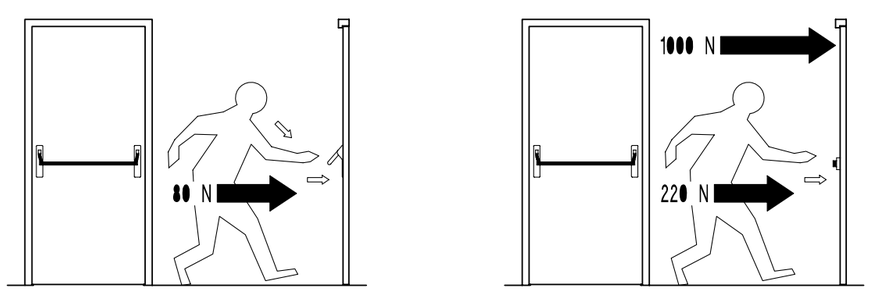

Panic crossbar types

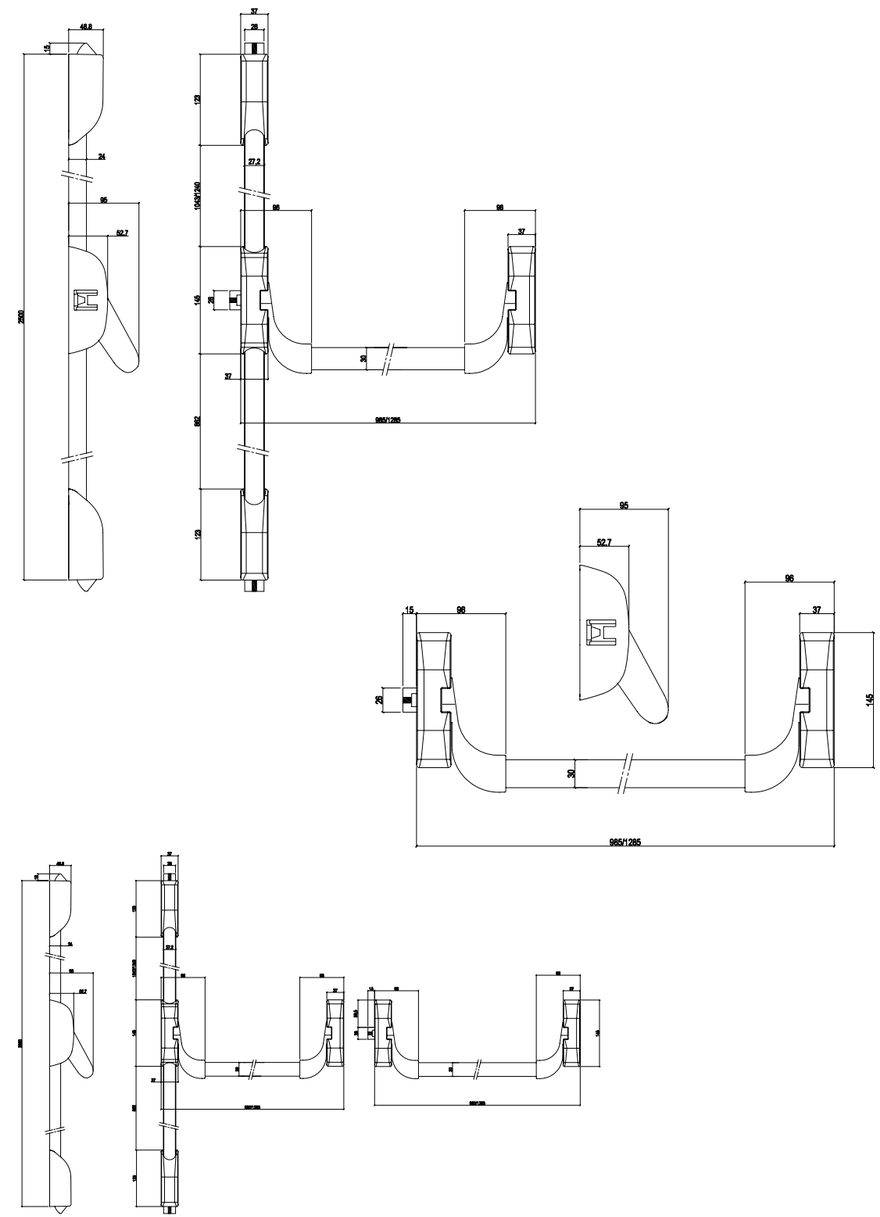

Smoke-Protection acc. to DIN 18095

Planning laws and test procedures

The effect of Smoke-Protection-Doors

In case of fire, the smoke emission is an often underestimated danger. Within seconds smoke can spread throuout the entire building. Smoke and fumes are therefore life-threatening and the cause of effects such as panic, line-ofsight obstruction, oxygen deficiency and toxicity. The nontransparent smoke and the toxic fumes decrease the oxigen content and can lead to death within seconds.

The function of installed and closed Smoke-Protection-Doors is to hinder the smoke and fumes from passing through.

Smoke-Protection-Doors according to DIN 18095

The DIN 18095, as technical building regulation has been introduced in all German states. With the introduction of this DIN it became mandetory to install a socalled smoketight door, officially approved according to DIN 18095, whenever a smoke protection function is required.

Impermeability test

The mandatory impermeability test allows a certain leakage rate for the passage of smoke in a closed door set. Under a preassure of 5 to 50 Pa and an ambient temperature of 200° C the leakage rate must not exceed the following values:

- 20m3/h for 1-leaf RS doors
- 30m3/h for 2-leaf RS doors

Smoke-Protection-Doors and fittings must not deform, nor open during the impermeability test. The 2-leaf doors, models 4.01 and 4.11, with counter-rebated door leaf/top panel by default feature a rabbet ledge on the top panel.

Long-term durability test

The DIN 18095 demands that Smoke-Protection-Doors undergo a long-term durability test according to DIN 4102 part 18. The test requires 200.000 opening cycles, during which, door leaf , frame and fittings are tested as a set.

Test procedures and guidelines

Test procedures

Due to the introduction of the Smoke-Protection-Door as regulated building material, a testing according to DIN 18095 in an officially accredited Institute for Material Testing has become mandatory.

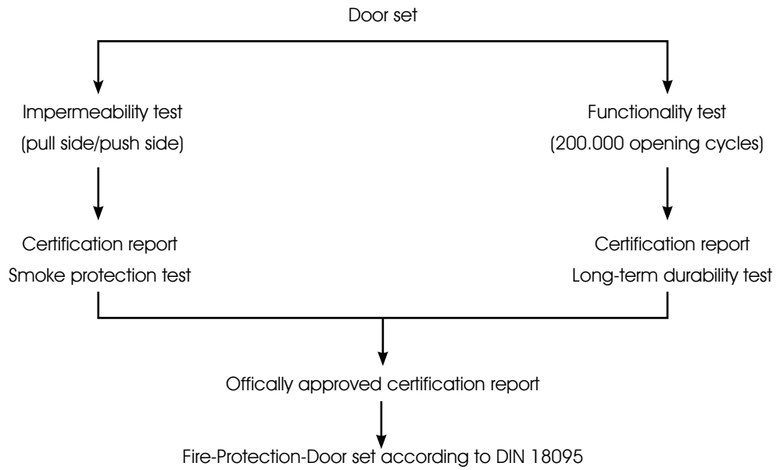

Labeling and monitoring

The fire protection function has to be verified by the manufacturer by attaching an official label on the edge of the door leaf and by handing out a copy of the official technical approval.

- Door DIN 18095-RS 1 (1-leaf door)
- Door DIN 18095-RS 2 (2-leaf door)

The manufacturer has to make sure and certify that the production of the Smoke-Protection- Doors is monitored regarding constant quality and performance. In regard of the requirements for the self closing function, only approved door closers and holdopen devices are allowed. Smoke-Protection-Doors just like Fike-Protection-Doors can only fulfil their function when closed.

Delivery set

As an approved set, door leaf, door frame and the necessary fittings, form the complete delivery set.

Permitted modifications for smoke protection closures

If necessary Smoke-Protection-Doors without fire protection function can be shortened, as long as the groove for the bottom seal is remilled according to the certification report, respectively the metal shortening label on the door leaf edge.

If additonal security fittings, such as security bolts, magnetic contacts, etc. or other additional equipment components such as protective plates or ram protection bars are installed, they must not interfere with the self-closing and smoke-hindering functions of the door set.

The installation of warded locks is not permitted for Smoke-Protection-Doors. In addition to that helical hinges are not permitted in combination with Smoke-Protection-Doors, because the norm requires door closers with hydraulic absorbability.

Approved installation

While mounting the Smoke-Protection-Door set follow the certification report as well as the installation manual. Particular care is inevitable while sealing the joint between frame and wall with a permanent elastic material (e.g. silicone), to prevent any leakage of smoke. The impermeability of the door set is primarily based on the frame sealing and the bottom seal. Therefore their maintenance and, if damaged, their replacement is inevitable.

Combination with additional door functions

Sound-Insulation

RS doors with factory-equipped effective bottom seal or a 4-sided frame, by default meet Rw,P 32 dB sound insulation requirements. Smoke-Protection-Doors can reach even higher sound insulation values. For the possible performance range see the table multiple functions with Sound-Insulation.

Burglar-Protection

1- and 2-leaf Dafadoor RS doors meet, with special factory-equipment, the requirements for resistance classes WK 2, WK 3 and WK 4. The attack side can be chosen from either the pull or push side. Configurations such as vision panels, fanlights, counter-rebated top panels or the installation in lightweight partition walls or respectively Dafadoor Smoke-Protection-Glazings Type 25 V-RS are possible. Different frame variations, made of either steel, wood or wooden materials, can be applied. For extensive possibilities see the table multiple functions with Burglar-Protection.

Radiation-Protection

RS doors with vision panel and/or top panel are available with an additional radiation protection function (lead equivalent value of up to 4 mm). If the lead equivalent value is 2 mm or more a lock with shifted follower and cylinder drilling is used. The bolting of the inactive leaf for 2-leaf door sets is realised with a conseald shot-bolt lock.

Bullet-Resistant M 3

The solid Smoke-Protection-Door in special design with steel frame meets the requirements for a Bullet-Resistant-Door.

Wet Room

Smoke-Protection-Doors, in special design can be constructed as Wet Room Doors with the adequate materials.

Climate category II

The whole range of Dafadoor Smoke-Protection-Doors meets the requirements for Climate category II. Due to constructive actions all doors, except the solid wood framed door, are available in Climate category III.

Climate category III

This high standard can be reached with some special doors.

Thermal insulation

In combination with the smoke protection function some fire doors meets high thermal insulation requirements.

Mechanical stress group

All solid doors in the range of Dafadoor Smoke-Protection-Program by default meet the requirements of the Stress group S, therefore they resist static and dynamic deformation as well as hard and soft impact.

SOUND-INSULATION

Sound-Insulation acc. to DIN 4109

Planning laws

Minimum requirements of the airborne sound insulation for doors

Due to the fact that the DIN 4109 has been introduced as technical building regulation in all German states, the minimum requirements for the sound insulation between certain rooms and areas are mandatory .

The DIN 4109 allows three different standards for the airborne sound insulation in order to prevent sound propagation from external living and work spaces. These are according to application area organised in sound insulation values Rw,P 32 dB, Rw,P 37 dB and Rw,P 42 dB.

If necessary it may be appropriate to determin the sound insulation values in the tender specifications according to the increased recommondations of DIN 4109 (see bracket values).

Building type	Areas and rooms, in-between which doors are installed			Rw,R in dB	Rw,P in dB
Multistorey buildings with appartments and offices	Corridors and stairwaysx	↔	Hallways, lobbies	27 (37)	32 (42)
	Corridors and stairways	↔	Common rooms in appartments	27 (37)	42
Schools - tuitional buildings	Hallways	↔	Classrooms and alike rooms	32	37
Accommodations	Hallways	↔	over night accommodations	32 (37)	32 (42)
Hospitals - nursing homes	Examination respectively consulting rooms	↔	Examination respectively consulting rooms	37	42
	Hallways	↔	Examination respectively consulting rooms	37	42
	Hallways	↔	sick rooms	32 (37)	32 (42)
	Operating/ sick rooms	↔	Operating/ sick rooms	37	42
	Hallways	↔	Operating rooms/ surgery	37	42

Table: Minimum requirements of the airborne sound insulation for doors (excerpt from DIN 4109)

Significant values

Sound insulation values of doors

According to DIN 4109 sound insulation tests of installed, ready-for-use door sets have to be made in order to assure a perfect coaction of door leaf and gasket.

Term used by Dafadoor	Rw,R value according to DIN 4109	Test stand value Rw,P value
Sound-Insulation 32	27 dB	32 dB
Sound-Insulation 37	32 dB	37 dB
High Sound-Insulation 42	37 dB	42 dB
High Sound-Insulation 45	40 dB	45 dB*
Extreme Sound-Insulation 48	43 dB	48 dB*
Extreme Sound-Insulation 50	45 dB	50 dB**

* Tested stand value exceeds requirements of DIN 4109 (max. demanded value Rw,P 42 dB).

****Note:** As Dafadoor; we are nat producing.

Rated sound insulation value

Significant parameters for the requirements of airborne sound insulation and subsonic noise insulation of structural elements are:

Rw Rated sound insulation value in dB without sound propagation of flanked structural elements.

Rw is the in the tender specification demanded and the on site expected sound insulation value of the stuctural element. For the calculations of the edificial acoustitcian this value is defined as Rw,R.

R'w Rated sound insulation value in dB with sound propagation of flanked structural elements.

According to DIN 4109 the rated sound insulation value Rw is differentiated in:

Rw,P Value determined during the suitability test of the structural element - in this case of the complete door set, consisting of door leaf, frame, fittings and sealing agent - in the sonic laboratory, according to DIN EN ISO 140.

Rw,R Calculation value which must be identical with the on site requested value.

Allowance of tolerances

The on the test stand determined sound insulation value (Rw,P) for doors has to exceed the on site requested minimum requirements (Rw,R) by an allowance of tolerances of at least 5 dB. The following applies:

Rw,R = Rw,P – 5 dB

Fixed glazings have to exceed the on site requested minimum requirements (Rw,R) by an allowance of tolerances of at leat 2 dB. The following applies:

Rw,R = Rw,P – 2 dB

The allowance of tolerances is supposed to account for possible differences of the sound insulation between the test stand and the requested requirements, due to the on site characteristics and the potential dispertion of the characteristics of the tested door set.

Regulations for Sound-Insulation-Doors

Rw,P = 32 dB value is met with an effective bottom seal in the door leaf and a 3-side circumferential sealing agent in the frame or with a 4-sided frame with a circumferential sealing agent.

Rw,P = 37 dB value is met with one sealing level, by the following door types 1 N/ 13 N/ 14 N, 25 N /27 N, 5 N/6 N, 35 N, 5-60 / 6-60, 120-1, 25 N Slimline / 27 N Slimline respectively 8 N. The door types 10 N / 20 N and 24 N reach this value with a second sealing on the double rebate.

Rw,P = 42 dB value is met with an additional rebate gasket, respectively with a second sealing level in the frame jamb (unrebated door leaf with jamb rebate), as well as a second effective bottom seal for the door types. The T 90 doors reaches the value with a combination of fire-resistant inlays and highly sound-insulating materials, for the T 90 doors an additional sealing level is necessary.

Rw,P = 48 dB value is met with the door types by using highly soundinsulating materials and three sealing levels as well as two bottom seals. The door leaf of door has to be rebated with double jamb rebate and an additional rebate gasket.

Configuration

The above listed sound insulation values (Rw,P) have been approved for 1- and 2-leaf doors with top panel (top panel/ fanlight) up to Rw,P 50 dB. The Dafadoor program comprises rebated and unrebated doors (partly unrebated with jamb rebate) with vision panel and an extensive range of steel and wooden frames.

A complete door set consists of the door leaf, the door frame and the sealing agent, as stated in the certification report in order to reach the specified sound insulation value during a possible on site sound measurement.

Rebated doors with Rw,P ≥ 42 dB require hinges which support a rebate gasket.

If a floor-mounted door closer with cover panel is installed, a decrease of the sound insulation value has to be expected. For the installation of concealed door closers (ITS 96) the tested sound insulation value is met without any limitation.

Installation and mounting

Installation instructions

Precondition for the achievment of the warranted sound insulation value is the correct installation of the door set. The provided Dafadoor installation manuals and the mounting regulations need to be followed.

Term used by Dafadoor	Requirements Rw,P acco. to DIN 4109	Steel door frame Solid wall	Steel door frame Gypsum plasterboard
32	32 dB	Mortar Mineral wool 2-K-PU-foam	Mineral wool 2-K-PU-foam Mortar
37	37 dB	Mortar Mineral wool 2-K-PU-foam	Mineral wool 2-K-PU-foam Mortar
42	42 dB	Mortar Mineral wool	Mortar Mineral wool
45 / 48 / 50	45 dB/48 dB/50 dB	Mortar	Mortar

Term used by Dafadoor	Requirements Rw,P acco. to DIN 4109	Wooden door frame Solid wall	Wooden door frame Gypsum plasterboard
32	32 dB	2-K-PU-foam	Mineral wool 2-K-PU-foam
37	37 dB	Mineral wool 2-K-PU-foam	Mineral wool 2-K-PU-foam
42 / 45	42 dB / 45 dB	Mineral wool 2-K-PU-foam	Mineral wool 2-K-PU-foam
48 / 50	48 dB / 50 dB	Mineral wool	Mineral wool

The following installation instructions should be seen as an addition to the installation manual. Generally the correct filling of the cavities is essential. A complete filling with mortar or the tight stuffing with mineral wool is as important as the gapless filling with 2-K-PU-foam.
According to DIN 18111 the cavities of steel frames in solid walls have to be completly filled with mortar. In order to reach the sound insulation value steel frames without filling have to be sealed with a permanent elastic material (e.g. silicone). Wooden door frames have to be sealed on at least one side, from Rw,P 37 dB on both sides
have to be sealed.
The predetermined ground clearance of Sound-Insulation-Doors is 7 mm, if the ground clearance is more than 7 mm a decrease of the sound insulation function has to be expected. Starting with an on site sound insulation value of Rw 32 dB (Rw,P 37 dB) an effective disjunction of the screed has to be planned, in order to prevent subsonic sound insulation. If carpet is used, the carpet needs to be divided and a ground sill must be installed. The bottom
seal has to be adjusted with great care. Thereby it is important that the contact pressure is applied evenly on the whole door leaf width.
If the frame is not correctly installed in the wall opening, a decrease of the sound insulation
function has to be expected.

Adjacent sound transmission ways

Even if the sound insulating door set was correctly installed, the sound transmission through walls, the floor or the ceiling is possible (adjacent sound transmission ways). Primarily these are:

- Walls (airborne and impact sound)
- Cable ducts and channels (airborne and impact sound)
- Door closures (airborne sound)
- Ceilings (impact sound/subsonic noise)
- Heating installation (impact sound)
- Air ventilation ducts (airborne and impact sound)
- Electrical installations, such as outlets or switches (airborne sound)

Combination with additional door functions

Burglar-Protection

1- and 2-leaf Dafadoor Sound-Insulation-Doors doors meet, with special factory-equipment, the requirements for resistance classes WK 2, WK 3 and WK 4. The attack side can be chosen from either the pull or push side. Configurations such as vision panels, fanlights, counter-rebated top panels or the installation in lightweight partition walls or respectively Dafadoor glazings are possible. Different frame variations, made of either steel, wood or wooden materials, can be applied. For extensive possibilities see the table multiple functions with Burglar-Protection.

Radiation-Protection

Sound-Insulation-Doors with vision panel and/or top panel are available with an additional radiation protection function (lead equivalent value of up to 4 mm). If the lead equivalent value is 2 mm or more a lock with shifted follower and cylinder drilling is used. The bolting of the inactive leaf for 2-leaf door sets is realised with a conseald shot-bolt lock.

Bullet-Resistant M 3

The solid Sound-Insulation-Door in special design with steel frame meets the requirements for a Bullet-Resistant-Door.

Wet Room

Sound-Insulation-Doors, in special design can be constructed as Wet Room Doors with the adequate materials.

Climate category II

The whole range of Dafadoor Sound-Insulation-Doors meets the requirements for Climate category II. Due to constructive actions all doors, except the solid wood framed door, are available in Climate category III.

Climate category III

The door types in special design meet the requirements for Climate category III.

Climate category IV

Thermal insulation

In combination with the smoke protection function the door type 35 N meets high thermal insulation requirements.

Mechanical stress group

All solid doors in the range of Dafadoor Sound-Insulation-Program by default meet the requirements of the Stress group S, therefore they resist static and dynamic deformation as well as hard and soft impact.

Burglar-Protection acc. to DIN V ENV 1627

Classification and test procedures

Terms and test regulations

Burglar-Protection-Doors are suitable for protective areas or rooms where the unauthorised and forceful entering should be hindered or constrained.

Since April 1999 the DIN V ENV 1627 has replaced the previous DIN V 18103. Burglar-Protection- Door sets are now graded class 6:

While the prestandard exists the certification reports and the test reports according to DIN V 18103 are valid as proof of the Burglar-Protection according to the **correlation chart NA.3** of DIN V ENV 1627. Irrespective of that all Dafadoor Burglar-Protection-Doors are approved according to DIN V ENV 1627.

Resistance class DIN V ENV 1627	DIN V 18103	Resistance time	Type of criminal Assumed approach
WK 1	--	no manual test	Structural elements of the resistance class 1 feature a basic protection against break-in attempts with physical force, such as kicking against, jumping against, shoulder ramming, pushing up and ripping out (prevalent vandalism)
WK 2	ET 1	3 minutes	The occasional criminal uses simple tools such as a screwdriver, a gripper and cotters in order to open the locked and bolted structural element.
WK 3	ET 2	5 minutes	The criminal tries to open the locked and bolted structural element with an additional screwdriver and a cowbar.
WK 4	ET 3	10 minutes	The experienced criminal uses additional cutting tools and hitting tools such as an axe, a prybar, a hammer and a chisel as well as a power drill.
WK 5	--	15 minutes	The experienced criminal uses additional electronic tools, such as a power drill, a jigsaw, a sabre saw and an angle grinder with a maximum disc diameter of 125 mm.
WK 6	--	20 minutes	The experienced criminal uses additional powerful electronic tools, such as a power drill, a jigsaw, a sabre saw and an angle grinder.

A Burglar-Protection-Door is a door which can, if closed, locked and bolted, withstand break-in attempts with physical force (without tools as well as with tools) for a certain period of time (resistance time).

The tests performed by a DIN CERTCO accredited testing laboratory. The certified structural elements are permanently marked with an official label.

Static test

During the test of the door statics, the door set is beeing stessed perpendicular to the door leaf level with a test cylinder over a defined period of time in the areas of hinges and bolting spots. The door leaf's maximum deflexion out of the frame must not exceed the determined maximum permissable value.

Shock loading

The tup consists of a sand filled leather ball (d ≈ 350 mm) with a mass of 30 kg. It is dropped on the door leaf from a height of 0,8 respectively 1,2 m with a deflexion of 1,5 m. During that the door leaf must not open or deform.

Manual resistance test

The manual resistance test is devided in to the pretest and the main test. During the pretest the weakspots of the door set are analysed. Afterwards in the main test an inspector tries to open the door or clear a passageway, using the defined tools within the resistance time.

Configuration WK 1, WK 2, WK 3 and WK 4

Resistance class WK 1

All Dafadoor solid door sets in combination with the current frame versions can be delivered as Burglar-Protection-Door sets according to the resistance class WK 1, using the proper security fittings.

Resistance class WK 2

All solid 1-leaf doors with 50 mm door leaf thickness out of the Dafadoor delivery range can be delivered as Burglar-Protection-Door sets according to the resistance class WK 2. A combination with various frame versions, such as steel frames, wooden wrap-around frames, wooden block frames as well as solid wooden frames, is possible. Type 3N and 13 N door sets with counter rebated top panel and fanlight are available in all steel and wooden frame versions. Models with 70 / 91 mm door leaf thickness are available with vision panel and as 2-leaf door sets approved according to the resistance class WK 2. The solid T 90 Fire-Protection-Doors are available with wooden and steel frames, also with counter rebated top panel in resistance class WK 2.

For the resistance class WK 2 (attack side = push side) the following equipment is necessary:

- Lock according to DIN 18251 respectively 18250 with special security equipment
- For 2-leaf doors, lock with 3-way bolting
- For 1-leaf doors, optionally with 3-way bolting
- ES 1 or ES 2 approved security knob-lever-set
- 2 mm sheet thickness for steel frames
- Optionally up to 5 additional security bolts on the pull side edge

For the resistance class WK 2 (attack side = pull side)
the following additional equipment is necessary:

- Hinges with security pin and welded hinge roll
- Joint clearance limiter
- Special core frame material for wooden frames

Resistance class WK 3

The 1-leaf doors (70 /91 mm door leaf thickness) are available with various frame versions, such as steel as well as wooden wrap-around frames, block frames as well as solid wooden frames, with vision panel, The 2-leaf doors types available as lintel-high door sets in resistance class WK 3 with attack side on push side. The solid T 90 Fire-Protection-Doors types are available with steel frames, also with counter rebated top panel in resistance class WK 3.

For the resistance class WK 3 **(attack side = push side)** the following equipment is necessary:

- Lock with 3-way bolting
- ES 2 approved security knob-lever-set
- 2 mm sheet thickness for steel frames
- Special core frame material for wooden frames
- 5 additional security bolts on the pull side edge
- Joint clearance limiter

For the resistance class WK 3 (attack side = pull side)
the following additional equipment is necessary:

- Hinges with security pin and welded hinge roll

Resistance class WK 4

The door types are available with various steel and wooden frame versions for the attack side on push side. The rebate width is hereby 30 mm. For resistance class WK 4 the following equipment is necessary:

- Special door leaf construction
- ES 3 approved security knob-lever-set
- Reinforced wooden frames
- 2 mm sheet thickness for steel frames
- 3-way bolting with hook lock
- Reinforced strike plate
- 5 additional security bolts on the pull side edge
- Joint clearance limiter

Requirements for connecting walls

If Burglar-Protection-Door sets are installed, certain standards have to be regarded while planning the wall type and thickness:

Solid wall

Resistance class of the Burglar-Protection-Door	Masonry according to DIN 1053 part 1			Steel concrete according to DIN 1045	
	Minimum width in mm	Pressure resistance class of the stones	Mortar group at least	Minimum width in mm	Material strength class at least
WK 1	≥ 115 mm	≥ 12	II	≥ 100 mm	B 15
WK 2	≥ 115 mm	≥ 12	II	≥ 100 mm	B 15
WK 3	≥ 115 mm	≥ 12	II	≥ 120 mm	B 15
WK 4	≥ 240 mm	≥ 12	II	≥ 140 mm	B 15
WK 5	--	--	--	≥ 140 mm	B 15
WK 6	--	--	--	≥ 140 mm	B 15

(Excerpt of the DIN V ENV1627)

Gypsum plasterboard wall

Dafadoor Burglar-Protection-Door sets are also approved for the installation in gypsum plasterboard walls. The walls need to be reinforced on the steel pipes minimum dimensions 50/50 /4 mm (matching the dimensions of the wall system and the required static values) fastened on the unfinished floor and cealing in the area of the door opening. A horizontal pipe across the lintel connects the two perpendicular pipes.

Adequate breakthrough resistant gypsum plasterboard walls need to meet one of the folowing requirements:

Resistance class of the Burglar-Protection-Door	DIN 52 290 (old)	DIN EN 356 (new)	VdS 2534	DIN ENV 1627
WK 2	A 3	P4 A	N	WK 2
WK 3	B1	P6 B	A	WK 3

e.g.:
- Rigips System 6.50.00 fire wall TB
- Knauf security wall W 118
- Lafarge fire wall L 18

Combination with additional door functions

Sound-Insulation

In principle, Burglar-Protection-Doors with factory-equipped effective bottom seal or a 4-sided frame, by default meet Rw,P 32 dB sound insulation requirements. Burglar-Protection-Doors can reach even higher sound insulation values, if equipped with multiple bottom seals, the sound insulation function then is the eponymous function. For the possible performance range see the table multiple functions with Sound-Insulation.

Radiation-Protection

Burglar-Protection-Doors with vision panel and/or top panel are available with an additional radiation protection function (lead equivalent value of up to 4 mm). If the lead equivalent value is 2 mm or more a lock with shifted follower and cylinder drilling is used. The bolting of the inactive leaf for 2-leaf door sets is realised with a conseald shot-bolt lock.

Bullet-Resistant M 3

The solid door in special design with steel frame meets the requirements for a Bullet- Resistant-Door.

Climate category II

The whole range of Dafadoor Burglar-Protection-Doors meets the requirements for Climate category II. Due to constructive actions all doors, except the solid wood framed door, are available in Climate category III.

Climate category III

The door types in special design meet the requirements for Climate category III.

Climate category IV

Thermal insulation

In combination with the burglar protection function the door type 35 N meets high thermal insulation requirements.

Mechanical stress group

All solid doors in the range of Dafadoor Burglar-Protection-Program by default meet the requirements of the Stress group S, therefore they resist static and dynamic deformation as well as hard and soft impact.

Regulations and requirements

Resistance class M 3

The requirements of the "bullet resistance class M 3" are met, on the basis of the tests of the resistance class C 3 according to DIN 52290, part 2 (attack-blocking glazings), with the door model 3.00.

Depending on the type of the operational demands (bore, bullet type) the bullet resistance class is determined. In order to confirm the resistance class M 3 a heavy handgun, bore "44 Magnum" (revolver, pan headed full metal jacket with a soft core) is fired off from a 3 meter distance.

Function

Bullet-Resistant-Doors are used in areas with increased security requirements against invasions raids. Examples are banks, savings banks, airports, police stations, ministries and embassies. The door's bullet resistant function has to be verified by the manufacturer by attaching an official label on the edge of the door leaf.

Installation

The installation of Bullet-Resistant-Doors is only possible with steel frame in solid walls.

Combination with additional door functions

Sound-Insulation and Burglar-Protection

The Bullet-Resistant-Door can be equipped with sound insulation function up to Rw,P 32 dB and burglar protection function up tp WK 3, but then these are the eponymous functions. For the possible performance range see the tables multiple functions.

Climate category III

The Dafadoor Bullet-Resistant-Door type 3 N by default meets the requirements for Climate category III.

Mechanical stress group

The Bullet-Resistant-Door by default meets the requirements of the Stress group S, therefore they resist static and dynamic deformation as well as hard and soft impact. In special design this door type also meets the requirements of the Stress group E.

Doors for internal areas

The minimum requirements for rebated and unrebated doors (flush doors) for internal areas are regulated by DIN 68706.

Exceptions are functional doors for special requirements e.g. Fire- and Smoke-Protection- Doors. According to DIN 68 706 a door for internal areas is a plane door leaf, which is mostly made of wood or wooden materials. The door leaf consists of a special plywood frame, intermediate layer, cover plate and the top layer.

Configuration and construction (Standard dimensions, vision panel size and position, material quality and range) concerning requirements and functions of interior doors are described in this norm. Door leaf dimensions, hinge and lock positions as well as their dimensional dependence on each other according to DIN 18 101 (doors for domestic buildings).

According to their ability to resist diverse climates (differences in temperature and/or humidity on either side of the door), interior doors, made of wood or wooden materials, are devided into three climate categories.

Function

The Dafadoor heavy-duty interior doors with solid core are approved for climate category II (Temperature differences up to 10 °C, humidity differences of up to 35 %), to assure perfect functionality even under difficult climate conditions. Due to a door leaf thickness of 50 mm the climate sturdiness as well as the Sound-Insulation characteristic are improved and drastically increased. Additionally the doors meet the requirements

for the stress group S classification, respectively E. In contrast to the standard rebate depth of 25,5 mm, the rebate depth of 35 mm provided by Dafadoor allows a better lockposition.

Veneered door leaf surfaces are being transparently coated by Dafadoor. The herefore used

acrylic lacquers result in a very durable surface, requiered for heavy-duty doors.

Climate categories acc. to DIN EN 1121

Requirements and test procedures

Climate categories

According to their ability to resist divers climates, wooden or wooden material interior doors are divided into different climate categories, in order to match the the door leaf and the demanded requirements.

The ability to resist divers climates means that the door leaf withstands the strains of **different climates** on either side. (temperature/humidity).

The Dafadoor test norm is based on the current norms DIN EN 1121 respectively DIN EN 12219. Three door leafs with the dimensions of approximately 1000 x 2000 mm are exposed to an exactly defined test climate (according to DIN EN 1121) over the period of up to 28 days. In accordance with DIN EN 12219, class 2, the door leaf must not exceed a deformation level of 4,0 mm. A deformation in this range does not interfere with the door's function or usability.

Climate categories according to Dafadoor	DIN EN 1121				
	Test climate	Temperature differences (C°)		Humidity differences (%)	
I	a	18 ± 2	23 ± 2	50 ± 2	30 ± 2
II	b	13 ± 2	23 ± 2	65 ± 2	30 ± 2
III	c	3 ± 2	23 ± 2	85 ± 2	30 ± 2
IV	d	-15 ± 2	23 ± 2	no requirements	30 ± 2

Climate category II

In general climate category II is recommended for rooms with high humidity over a long period of time, for example:

- Heated appartment
- Rooms across from heated hallways respectively stairways.

All Dafadoor doors are by default approved for climate category II.

Climate category III

Door sets with climate category III are recommended for rooms with high humidity and temperature changes and differences, for example:

- Appartment doors to not heated hallways respectively stairways
- Doors in public buildings
- Interior doors to garages
- Interior doors to not insulated attics
- Basement doors

The door types by default approved for climate category III.

By optional measures all door types, except the T 30 solid wood framed door and the Radiation- Protection-Door, meet the requirements of the climate category III.

Climate category IV

The climate category IV is especially designed for doors under extrem climate conditions.

- Doors for external use, for not directly weather exposed locations
- External doors

The door type 35 N fulfils these very high requirements.

Regulations and requirements

the u-value (formerly k-value: the heat transmission coefficient), the significant air permeability Q100 is an important criteria to classify structural elements for external use.

U-Wert: heat transmission coefficient

The u-value shows how much heat energy emits to the outside during a certain time unit, if a temperature difference of one degree (1 K) compared to the amient air prevails. This is based on one square meter of the structural element. The lower the u-value, the better the thermal insulation quality of the material.

The energy saving regulation (ENEV) demands a u-value of ≤ 2,9 W / (m^2 K) for the renewal of exterior doors. There are no requirements for the structural element door leaf if installed in new buildings. According to the calculation standard EN ISO 10077-1 the u-value for doors is labeled with the index "D".

The Dafadoor door element type 35 N for external use (not for directly weather exposed locations) features according to the Sound-Insulation value different u_D-values.

Door type 35 N

Sound-Insulation value	u_D-value
Rw,P 37 dB	1,31 W / (m^2 K)
Rw,P 42 dB	1,38 W / (m^2 K)

Significant air permeability Q_{100}

The significant air permeability Q_{100} replaces the term of joint impermeability coefficiant (a-value). According to DIN EN 12207, the Q_{100} value shows the air permeability of the door set at 100 PA the air pressure difference (significant pressure) per our, based on the the door set surface or the joint length. It is categorised in the classes 1 - 4, whereas class 1 means no joint impermeability requirements at all.

The Dafadoor door type 35 N achieves a value of 3,9 m^3 / hm^2 based on the surface of the whole the door set, respectively 1,0 m3 / hm2 for the joint length. Both values allow the categorisation in class 3.

STRESS GROUPS

The mechanical stress of interior doors results from external influences, such as soft impact, hard impact, static deformations and vertical stress. According to the Dafadoor standard (on the basis of DIN EN 1192)and the type of stress, Dafadoor door sets are devided in four mechanical stress groups™:

Stress group according to Dafadoor	DIN EN 1192				
	DIN EN1192	Vertical stress	Static deformation	Soft impact	Hard impact
N_1	1	400 N	200 N	25 J	1,5 J
N_2	2	600 N	250 N	50 J	3,0 J
N_3	3	800 N	300 N	100 J	5,0 J
N_4	4	1000 N	350 N	150 J	8,0 J

Stress group N_1

Normal stress e.g.

- Interior appartment doors

Stress group N_2

Medium stress e.g.

- Office rooms
- Other commercially used rooms

Stress group N_3

High stress, same as group N and M, but with higher stress e.g.

- Barracks
- Hotels
- Kindergartens
- Schools
- Hospitals

Stress group N_4

Extreme stress, same as group S, but with abrasive use.

Test criteria

Interior doors are being tested in order to determine their mechanical durability

- Static deformation according to DIN EN 947
- Dynamic deformation according to DIN EN 948
- Soft impact according to DIN EN 949
- Hard impact according to DIN EN 950

Dafadoor special doors by default meet the requirements for the stress group S, with the exception of the solid wood framed door, which is due to its large glass share not intended for this test.

ELECTROMAGNETS

Electromagnets

Electromagnets are hold-open devices for Fire-Protection closures. In the case of a fire the hold-open device is dismissed by the release unit (smoke detector and control unit). The selfclosing of the door is effected by door closers.

According to legal regulations Fire- and Smoke-Protection closures, which due to operating procedures are held open for a certain period of time (e.g. buildings with high visitor traffic), have to be equipped with hold-open devices. In the case of a fire the door leaf has to be released by cutting off the holding current in order to be able to close, with the help of an additional door closer. These hold-open devices, which have to be certified by the DIBt, consist of the hold-open device and the release unit.

For example DORMA electromagnets in combination with the control unit RMZ-K and the smoke detector RM are approved and certified. The DORMA EM electromagnets differ in casing configuration and hold-open strength. The working current is 24 V direct current.

Depending on the installation situation electromagnets can be mounted on the wall, either underneath the plaster or on top of the plaster, on the floor or on the ceiling. Electromagnets feature on-spot hold-open and a great hold-open strength.

Electromagnets are not part of the Dafadoor delivery set and have to be provided on site.

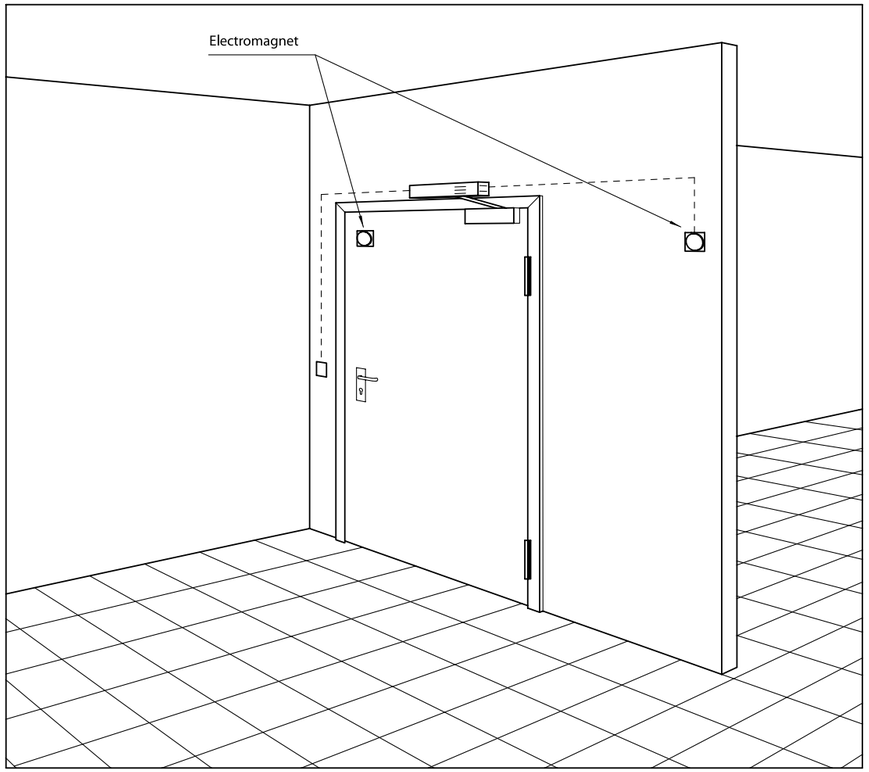

INSTALLATION

The importance of correct installation of fire doors cannot be emphasised too strongly. Many recorded instances exist where fire doors have been unable to fulfil their intended function because they have been inadequately installed. This is often because fire and smoke stopping arrangements between the doorframe and the surrounding structure are inadequate or have been overlooked though there are numerous possible causes of installation failure which are discussed in this chapter.

Door installation is a very skilled speciality and it is strongly recommended that an installer be used who is a member of a recognised quality assurance scheme to ensure that the intended fire rating is achieved and maintained.

Fire tests on the installation system

Fire resistance tests examine installation as well as all other constituents of the test specimen. The installation is part of the design.

The fire test procedure uses the second-fix system whereby the test specimen is installed into a prepared opening in the supporting construction. The practice of first-fixing timber doorframes and hanging door leaves later is deprecated. Accordingly, the guidance on installation is confined to second-fixing.

Test reports will describe the method of fixing used together with details of firestopping that was employed. This fixing method or a variant of it approved by an assessment authority must be used in practice.

Fitting–in margin

Ideally for second-fixing, the fitting-in margin between the perimeter of the doorframe and the inside face of the

prepared opening will be 5mm on each jamb and 7mm at the head. This greater margin at the head will allow doorframes to be packed up a few millimetres if necessary to allow the door leaf to swing over any minor high spots in floor level or overthickness of floor coverings.

It is also necessary to consider the tolerances to be allowed in the building of the prepared opening. Ideally, these will be +5/-0mm for each jamb and +5/-0mm for the head. These margins and tolerances will allow architrave

arrangements that cover as little as 15mm to be successfully employed.

Packing

The installation process involves packing the space between the back of the doorframe and the opening immediately above each fixing position. The best practice is to hang the leaf and use it as a template. When the doorframe is correctly packed and fixed, the door leaf is vertical with even operating gaps of the intended size around its perimeter.

Materials

It is prudent to bear in mind that any timber associated with this process is likely to shrink if not completely dry when

used. For this reason, packings should preferably be of hard or stable material such as plastic 'trouser leg' packers, offcuts of laminate, metal shims or plywood.

Shrinkage

Also to be anticipated is shrinkage of timber used within metal studs around prepared openings in flexible partitions

which occurs when the building dries out. The effect of shrinkage of packings and stud fillings is most apparent at the foot. The lateral force imposed by the door leaf at the bottom hinge position can compress packings and metal studs. Shrinkage can result in the following defects:

• The leading edge of the door leaf may drop resulting in binding at the top of the closing edge and at the floor.

• In the case of double leaf doors, the leaves may bind at the top of the meeting edge while the gap between the leaves at the bottom will increase and leading edges may bind on the floor.

The correct operation of the door is impaired by these defects and integrity will be compromised.

Moisture intake

Binding of door leaves in their doorframe is frequently caused when joinery swells in response to excessive moisture levels on site.

Adjustment to operating gaps

Any adjustment to the fit of door leaves that is indicated should as far as possible be deferred until the site has dried.

The full scale of any defect will then be apparent and can be remedied in a single operation.

• The temptation to make adjustments too early can often result in excessive gaps developing as the building fabric becomes drier.

• When it is necessary to make adjustments these should be carried out as far as possible on the doorframe fixings by reducing or increasing packing.

• A secondary option is to pack out behind hinges or recess them further.

• Only as a last resort should door leaf edges be trimmed. This may interfere with intumescent and smoke seals which may have to be replaced or re-housed, and may involve repositioning of hardware. All of these can seriously affect the quality and integrity of the fire door.

Subframes

Accuracy of openings

Dimensional accuracy of the prepared opening is very important to the correct installation and performance of fire doors.

Fitting-in margins of 5 - 10mm can be firestopped and smokestopped effectively and economically. If joints are large and uneven, this will have to be an ad hoc operation using expensive filling materials and unnecessary labour.

Role of subframes

A subframe is supplementary to the main doorframe, and is used to line a structural opening and create a prepared opening as a preliminary to the installation of a door. A subframe may take the form of a template to which the supporting construction is built or may be second-fixed into a prepared opening.

Subframes are normally made of timber, plywood or cellulosic board, usually of thickness between 18 and 25mm, and normally remain in position as a permanent feature of the prepared opening. Subframes provide a means of assisting in the creation of accurately dimensioned, square and vertical prepared openings. They can:

• Provide a template where it is difficult to build prepared openings to the required accuracy particularly in conjunction vwith masonry supporting constructions.

• Enable the formation of an opening that is accurate in respect of squareness and overall dimensions.

• When installed to a datum, be levelled horizontally and vertically. This greatly improves the appearance of an installation.

• Ensure that doors can be installed as planned with the correct fitting-in margins.

Doorframe fixings with subframes

Subframes provide a fixing for doorframes across the whole width of the inside face of the prepared opening while the subframe itself may be fixed through points across its width into the most secure parts of the supporting construction.

• Example: metal stud systems with two layers of plasterboard each side may often have only a narrow central portion of the stud available to take doorframe fixings. The subframe can be securely fixed through to the stud. The doorframe and any architraves can then be fixed to the subframe at any point on the face and edge.

Use with dry-lined or plastered masonry

A subframe can greatly assist the accurate construction of a typical masonry supporting construction that is dry lined with adhesive fixed plasterboard or rendered on one or both sides.

Subframes fixed plumb and square inside the blockwork structural opening before plasterboard or rendering is applied can act as a template. The boarding or rendering can be finished to this thus controlling the thickness of the supporting construction around the prepared opening to the planned dimension. The subframe itself provides the prepared opening and so all dimensions can be controlled within planned tolerances.

Doors can be brought to site late in the second-fix programme when the site is drier in the knowledge that all the openings will be to the planned size and thickness.

Firestopping and smokestopping

The requirement

Voids and gaps between subframes, doorframes and the supporting construction have to be firestopped.

When cold smoke leakage is to be prevented, the gap sealer must completely close the gap and have some flexibility. Rigid fillers may shrink back over time and give rise to air gaps that are sufficient to cause the door to fail the cold smoke leakage criteria.

Large gaps

Large and irregular gaps and voids can be filled with cementitious material, packed with mineral wool or sealed with intumescent material. Options in respect of intumescent materials for gaps up to 35mm are:

- Intumescent plasters
- Intumescent acrylic emulsions
- Intumescent dry foams

Intumescent fillers

The intumescent options have the advantage that they can accommodate some movement and can more securely close voids in the case of fire.

Dry fillers

The dry options have the advantage that they reduce the potential for damage to the doorframe appearance.

Constant gaps

Options are:

- When the fitting-in gap is constant in width and close to the recommended width of 5 - 10mm, gun-applied intumescent mastic, usually backed up by polyethylene rod pushed into the gap, is suitable for both fire and smokestopping.
- Intumescent strips of a type that is capable of sealing gaps up to 10mm or more at the head may be fitted to the back of any subframe and the doorframe. When smokestopping is needed, conventional mastic gap filler can be used in addition to any intumescent strip.

Architraves

- When architraves are employed as part of FD30 doors, these alone may provide the means of firestopping gaps behind any subframe, as well as gaps between the doorframe and any subframe, provided they are at least 12.5mm in thickness and the gap size does not exceed 5mm.
- For fire doors with higher classifications, architraves alone are unlikely to suffice unless of increased thickness or reinforced with a fire resisting board.
- Architraves alone will not prevent leakage of cold smoke though if tightly fixed and sealed at the back they will reduce it. To fully smokestop the doorframe and any subframe the gaps and voids must be filled as described.

Certification of installation system

It should be borne in mind that it is the complete installed door that has to be proven by test evidence.

Test evidence or assessment of firestopping designs and the effectiveness of architraves is necessary. The same is true in respect of smokestopping.

The completeness of the supporting test or assessment evidence must be verified in respect of:

- The quality of the prepared opening.
- The fixing of the fire door.
- The methods adopted to firestop and smokestop fitting-in gaps and voids.

Maintenance, troubleshooting and protection

Acceptance procedure

It is to be expected that the installation of fire doors will take place in conjunction with an inspection and acceptance procedure whereby the installation at the point of delivery from the responsible contractor is verified as compliant with certification and is operating perfectly.

Maintenance

It would also be normal for a subsequent maintenance period to apply during which the responsible contractor will correct defects that arise that are its responsibility. Beyond this, ongoing maintenance of the installation in respect of function and appearance is the responsibility of the owner or user of the premises. A suggested checklist of routine maintenance actions is given in Appendix 1.

Specialist services

Door installation and maintenance is a specialised trade. It may be considered advantageous to employ a specialist contractor to carry out a planned routine combining the inspection and corrective action procedure.

Priority

Priority should be given to:

- The continued correct operation of the doors.
- The preservation of operating gap sizes within the range described in test or assessment certification relating to the installed fire doors.
- The preservation or replacement of elements of the fire resisting design that may be subject to degradation through wear or damage e.g.:

- glass
- intumescent and smoke seals
- intumescent coatings such as to glazing beads

Pre-emptive inspection programme

The objective must be to pre-empt malfunction and defects. This can be more completely accomplished in response to a planned programme of inspection and corrective action.

Corrective action is likely to be required more frequently during the early life of an installation as the building settles down and dries out. The small movements that occur in the building fabric at this stage can affect gap sizes.

The presence of smoke seals can make smoke control doors even more sensitive to small changes in gap size.

Reporting of malfunctions

It is also vital to the quality of the installation that building users report malfunctions immediately and that there is a system that provides for both recording these and prompt corrective action.

Damage prevention

Much damage to doors is caused by abusive use of the building. This may be unintentional and result from inadequate planning or briefing of personnel in relation to equipment and loads being transferred through the building and the correct

operation of the door system. Personnel using the building can make an important contribution to the quality of the fire door installation if they are encouraged to use the installation in a caring manner. Personnel who use equipment that is potentially damagecausing can be trained and encouraged to prevent this.

Protective measures

Planning the operation and protection of doors will play an important part in the successful avoidance of damage to the door installation.

For example, the following measures will reduce the more predictable causes of damage

Type of damage	Preventative measure
Damage to faces and the leading edge of door leaves, broken lippings, damaged smoke and intumescent seals caused by objects being wheeled or dragged through the doorway.	The use of a hold open device with doors on frequently trafficked corridors linked in with a fire detection system, if applicable. Delayed action closers set to allow for the passage of encumbered users and wheeled items.
Dislocation of doorframe fixings, damage to doorframes, door faces and edges caused by impact by wheeled equipment.	Protective rails or guards adjacent to the doorway that will deflect the object from contact with the door. Provision of recessed pockets in corridor walls within which held-open door leaves will be protected from edge damage. Wheeled equipment equipped with buffers that will soften impact and prevent abrasive action.

Troubleshooting door malfunction

Malfunctions will arise during and after any maintenance period due to a variety of causes. It is necessary that these be corrected promptly.

Binding

The most common is the gradual loss of operating gaps resulting in door leaves failing to close correctly. It may be that the leading edge binds on the doorframe or at meeting edges of double leaf doors. Often the bottom edge of a door leaf will bind on the floor.

The causes of and suggested remedies for this can be:

Symptom	Possible cause	Remedial options
Swelling of door components due to moisture intake.	Moisture content in the building is too high.	Check moisture content. Reduce humidity in building or area. Do not adjust doors unless still necessary after m/c has reduced to 12%.
Hinges have worked loose allowing door leaf to fall away from hanging jamb.	Often inadequate restraint allows the door leaf to be racked causing stress to fixings. The screw fixings used are of the incorrect diameter and length for the purpose. Not all screw holes have been used.	Tighten fixing screws. If necessary increase screw size. Provide restraint to prevent racking. Check screws and replace if defective.
Hinges have worn allowing door leaf to drop.	Hinges are not in accordance with BS EN 1935. Hinges incorrectly specified	Replace with correct size hinges.
Doorframe jambs have spread at bottom allowing leading edge of door leaf/ leaves to drop.	Often door leaf weight causes compression of packing or stud due to the effect of lateral load at the bottom hinge position.	Check doorframe fixings and re-pack at fixing positions particularly at the bottom until the door leaves hang correctly.
Doorframe fixings are loose.	Racking of the door leaf can result in a rotating force that has a levering effect on doorframe fixings. Impact by wheeled loads. Overdrilling or breakout of fixing positions.	Provide restraint to prevent any racking of the door leaf. Tighten fixing screws. If necessary replace failed plugs or make new fixing position. Check all packings and hang of door leaf. Provide protective rails/guards to deflect wheeled traffic away from the doorframe.
Door leaf binding on floor covering.	Floor covering applied after door installation may be over planned thickness. Possible high spots in screed within the arc of the door leaf.	While it is often possible to ease the bottom edge of the door leaf without damage to intumescent and smoke sealing systems it is preferable if possible to refix the door having packed up under the doorframe jambs.
Binding on closing edge and none of the previous reasons apply.	It is possible that the leading edge gap has been set too fine.	Adjust the gap by increasing the hinge recess/es in doorframe or door leaf.

Note: The edges of door leaves should not be planed or otherwise modified unless it is impossible to correct the fault by other means. If door leaves are adjusted, any intumescent and smoke seal that is damaged will have to be replaced.

Oversize gaps

A problem can arise in connection with operating gaps that become enlarged. In such cases door leaves will normally close correctly

but the gap size may exceed the range permitted by reference to the test or assessment certification.

The causes of and suggested remedies for this can be:

Symptom	Possible cause	Remedial options
When no smoke seal is present: Gaps in excess of range permitted by certification.	Most likely to be shrinkage of door components, doorframe packings and any timber elements in the prepared opening such as grounds, timber studs or subframes.	Pack out behind hinges. Repack and refix doorframe. In consultation with manufacturer, increase lipping thickness and replace seals.
When smoke seal is present: Any visible gap.	Minor disturbance caused by impact or shrinkage can create a visible gap.	Pack out behind hinges. Repack and refix doorframe. Replace smoke seals with new or larger.

Failure to close

In addition to closing failure caused by loss of operating gaps, other defects can develop or become apparent.

Symptom	Possible cause	Remedial options
Hinge binding resulting in the door leaf tending to spring open.	Either hinges have not been sufficiently recessed, or the door stop is too tight on the closing face of the door leaf.	Modify fitting of hinges. Adjust position of loose doorstops. Reset hinge positions when doorframe has an integral doorstop.
Door leaves twisted, bowed or cupped.	Doors may develop twist after installation if used with hold-open devices when the holding device is not level with the closing force. Distortion can be caused by hygrothermal differences on faces.	Remove the cause, the door leaf may return to a flat condition. It is possible to reduce the effect by moving hinge positions slightly. Replacement may be necessary.
Door leaves failing to latch.	Closer failing to overcome resistance of latch or seals. Latch bolt and strikeplate may have become misaligned. Door bolts not engaged. Possibility of misalignment of door bolts and sockets.	Adjust closer speed. Reposition strikeplate. Change seals. Ensure that users engage bolts at top and bottom of door leaf. Realign bottom bolts with sockets by adjustment to doorframe fixing if possible.
Binding of smoke seals when none of the previous problems apply.	It is possible that the leading edge gap has been set too fine. Seals may be broken or disrupted by wear or due to incorrect fitting.	The seals if in good condition will have to be refitted after retaining grooves have been modified to suit. If damaged they should be replaced with attention to correct fitting and cause of disruption.

SPECIAL NOTES BY DAFADOOR

DO NOT STEP ON STACKS

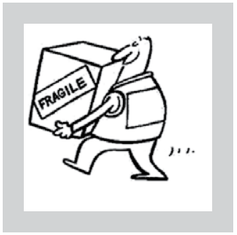

HANDLE WITH CARE

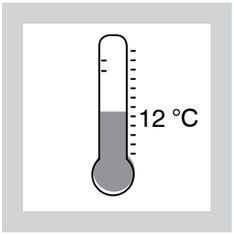

STORAGE AREA TEMPERATURE HAS TO BE MINIMUM 12°C

KEEP THE STACKS IN PLACES WITHOUT MOISTURE

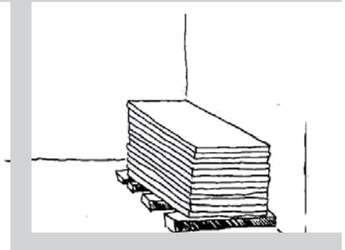

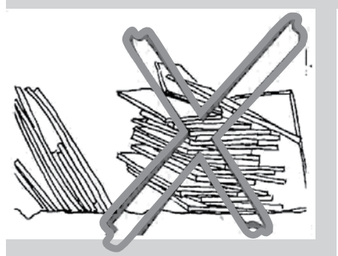

PLACE THE DOORS ON SMOOTH FLOORS ON AT LEAST FOUR WOOD BLOCKS IN EQUAL THICKNESSES, IN THE MANNER WIDE SURFACES FALL DOWNWARD

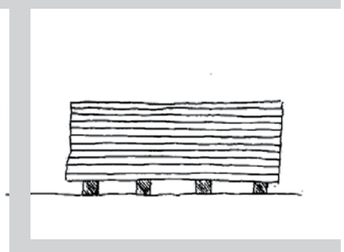

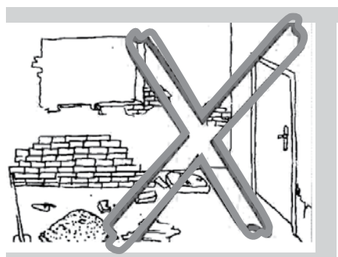

DON'T PERMIT INSTALLATION IN THE ROOMS WHERE PLASTERING, FLOOR - COVERING AND GLAZING WORKS ARE INCOMPLETE

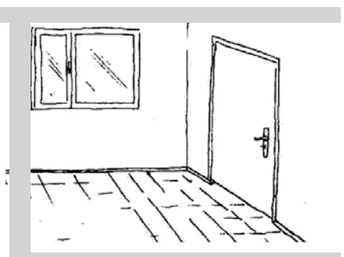

CARE, FINISH AND MAINTENANCE GUIDE

NOTICE

By nature, wood responds to the level of moisture around it. In a high humidity environment, wood will absorb moisture and swell or expand. Conversely , in an exceptionally dry climate, it will dry out and may split or crack. In order to maximize the life of your door or window unit and meet the conditions for the limited warranty protection, the product must be properly stored, installed, finished, and maintained.

It is the responsibility of the contractor and/or building owner to make sure the product is properly protected against environmental elements and undue moisture absorption. Failure to properly store, install , protect, finish, and maintain your door or window may void the limited warranty and may result in problems such as wood splitting, warping, panel shrinkage, wood joint separation, water penetration between moldings, panel sor glass.

Storage ,Handling and Installation

1. Inspect the door for any visible damage or defects upon receipt.

2. Doors should be handled with clean hands and equipment. When moving doors lift and carry, do not drag.

3. If the product must be stored before installation, store on a level surface in a dry, well-ventilated area. Relative humidity of the storage area should not exceed 50%

4. Do not expose unfinished doors to excessive heat, extreme dryness, high humidity, direct sunlight, or sudden changes in temperature.

5. Do not install unfinished doors into a building before the drywall, wet plaster, texture, or cement work has been completed and dried.

Finishing

General Guidelines

1. All doors must be finished or sealed or suitably protected no later than 14 days after arriving at the job site. Interior and exterior of wood doors and windows should be finished at the same time.

2. NERGIZ is not responsible for final field finishing results. Color variation in wood is a natural characteristic. To compensate for any wood color variation, it is expected that the finisher will make adjustments in the finish process as needed to achieve the desired results.

3. Always read and follow finishing manufacturer's instructions and warnings on each container of finish material for priming, painting, staining and varnishing.

4. Certain wood species, particularly oak, contain chemicals which may react unfavorably with certain materials in the finish, causing dark stain spots. Test finish prior to application, when possible.

5. Avoid using dark colored finishes on doors exposed directly to sunlight, to reduce the chance of the wood warping or cracking.

6. Finish and/or seal all wood sides and edges of door panels and window sash. All exposed wood surfaces, including top and botton rails, hinge pockets, cutouts, and hardware preps, must be sealed.

7. Do not attempt to finish product in wet weather or in temperatures lower than the temperature recommended by the finish manufacturer.

8. Do not paint or stain non- wood parts such as weather strip, hinges, locks, other hardware or exterior cladding.

Surface Preparation

Proper surface preparation is the most important step of the finishing process. The door must be dry before starting the finishing process. Wood should be less

than 16% moisture content. If necessary, remove and store door panel in a temperature and humidity controlled environment until the moisture content has equalized and adjusted to a more normal level.

1. Doors should not be considered ready for finishing when initially received. Before finishing, remove all handling marks, raised grain, job site inflicted scratches and scuffs and any other undesirable blemishes by thoroughly block sanding all wood surfaces with 220 grit sandpaper. If unit is being painted,fill all nail and fastener holes as well as any other surface cracks or imperfections using exterior grade wood filler that is compatible with the paint or finish being used.

2. Always sand in direction of grain with folded edge of sand paper facing direction of travel to prevent sandpaper from catching under a silver of wood. Small amounts of Grease, oil or pitch can be removed with mineral spirits.

3. Remove dust with a tack cloth or damp clean rag after sanding. Do not use caustic or abrasive cleaners as they may damage the wood.

Painting

1. After surface has been cleaned and prepped, apply a quality oil-based primer followed by a compatible quality oil-based topcoat. Do not use a water primer on wood surfaces. A minimum of two finish topcoats are recommended. Compatible latex resin-base topcoat paint may be used but only over a quality oil-based primer.

2. Lightly sand between coats using 220 grit sand paper. Remove dust with a tack cloth after sanding.

CAUTION

Wood doors facing sun exposure should not be finished with dark paints like black or dark gren. Wood may experience excessive movement and may split or crack. Use of dark color paints under these conditions may void the limited warranty.

Maintenance

In order to enjoy the beauty of your door for many years to come and comply with all conditions of the limited warranty, the finish on your door must be properly maintained to resist moisture absorption. It is recommended that the condition of the finish must be inspected at once at its first year. If any of the following symptoms are detected, please contact with your dealer.

- Hairline cracks in the topcoat of the finish
- Changes in color or dulling of the finish.
- Changes in texture of the finish such as flaking, scaling, chalking, or bubbling.
- Water penetration between wood moldings,panels, or glass.
- Wood joint separation.

CLASSIC AND SOFT LEATHER

DAY-TO-DAY MAINTENACE

- Vacuum the leather regulary with a clean brush
- Maintain a certain moisture level in the room
- Wash with a soap solution approx, once a year (see Maintenance below.)
- Never apply any stain removers, sulphonated liquid etc. to the leather.

MAINTENANCE

Pigmented leather is surface treated and thus treated and thus well protected aganist external influences as long as the pigmentation makes it difficult for dirt; water etc. to penetrate the leather surface. For cleaning use a clean, soft cloth. If necessary, wipe the surface with a cloth wrung in lukewarm water. In case of difficult and large stains, e.g. grease spots, carefully use a cloth wrung in a lukewarm soap solution (1/2 dl soap flakes per 1 litre lukewarm, boil water). Do not use stain

removers, sulphonated liquids or solvents on furniture leather.

Whisk the soap water and apply it on a soft wrung cloth to the entire surface in order to avoid blotching and rings; however, do not the leather.

There is no need to wipe off the surface ; the soap absorbed by the leather hence leaving a bit of fat. The leather dries slowly at normal room temperature. Should the leather after this operation end up with a matt, grey surface, is this due to the soap not having penetrated the leather; subsequently, polish with a dry, soft cloth.

STAIN REMOVAL

- Use only clean, boiled, lukewarm water.
- Soak up the stains with a clean, dry and soft cloth.
- Never rub hard.

GOOD ADVICE

- Avoid exposing leather furniture to strong heat.
- Avoid excessive dryness.
- Avoid direct sunlight.

ELEGANCE LEATHER

MAINTENANCE

- Wipe leather furniture frequently with a clean, dry cloth.
- Never apply chemicals, sulphonated washing and cleaning detergents or fats (leather polish/oil).
- Maintain a regular level of humidity in rooms in which leather furniture is placed. Naturel – coloured leather is a very delicate type of leather and will easily absorb liquids, e.g. spilled drinks/oils and fats. Only try to remove stains if absolutely necessary as the leather is easily damaged by cleaning attempts.

STAIN REMOVAL

- Soak up the stain with a clean, dry cloth.
- Never rub off the stain, but dab it up. If the stain does not disappear when using a clean, dry cloth, then try with a clean cloth wrung in boiled, cooled water or in a tepid soap solution (1/2 dl soap flakes per 1 litre water).

The leather should in this case be wiped (moistened) over the whole furniture surface to avoid shield edges. Leave the leather to dry before you begin to use the furniture again.

FRESHEING

Wipe over the entire furniture surface with a clean cloth wrung in a tepid soap solution (1/2 dl soap flakes per litre water). Make sure that the furniture is wiped homogeneously all over the surface to avoid shield edges. Leave the leather to dry before you begin to use the furniture again.

GOOD ADVICE

- Avoid exposing leather furniture to direct sunlight.
- Avoid placing leather furniture directly against sources of strong heat.
- Avoid air-drying of rooms in which leather furniture is placed.
- Avoid spilling liquids/oil and fats on leather furniture.

NATUREL LEATHER

GOOD ADVICE

- Avoid exposing leather furniture to direct sunlight.
- Avoid placing leather furniture directly aganist sources of strong heat.
- Avoid air-drying of rooms in which leather furniture is placed.
- Avoid spilling liquids/oils and fats on leather furniture.

MAINTENANCE

- Wipe leather furniture frequently with a clean, dry cloth.
- Never apply chemicals, sulphonated washing and cleaning detergents or fats (leather polish/oil).
- Maintain a regular level of humidity in rooms in which leather furniture is placed.

Naturel –coloured leather is a very delicate type of leather and will easily absorb liquids, e.g.spilled drinks/oils and fats. Only try to remove stains if absolutely necessary as the leather is easily damaged by cleaning attempts.

STAIN REMOVAL

- Soak up the stain with a clean , dry cloth.
- Never rub off the stain, but dab it up. If the stain does not disappear when using a clean, dry cloth, then try with a clean cloth wrung in boiled, cooled water or in a tepid soap solution (1/2 dl soap flakes per 1 litre water).

The leather should in this case be wiped (moistened) over the whole furniture surface to avoid shield edges. Leave the leather to dry before you begin to use the furniture surface to avoid shield edges. Leave the leather to dry before you begin to use the furniture again.

FRESHENING

Wipe over the entire furniture surface with a clean cloth wrung in a tepid soap solution (1/2 dl soap flakes per litre water). Make sure that the furniture is wiped homogeneously all over the surface to avoid shield edges. Leave the leather to dry before you begin to use the furniture again.

SUEDE

MAINTENANCE

- Never use any kind of chemicals or sulphone.
- Hoover suede regularly using a clean brush.
- Maintain air humidity.
- Wash with soapy water no more than once a year (1/2 dl soap flakes per litreof water).
- Use only clean, boiled, cooled7lukewarm water.

STAIN REMOVAL

- Try first to absorb the stain with a clean, dry and soft cloth.
- Never rub the stain, but dab it up.
- If the stain is not absorbed, try using a clean cloth wrung in boiled, cooled water or lukewarm soapy water (1/2 dl soap flakes per litre of water).
- If necessary, wipe (moisten) the leather of the entire furniture surface to avoid blocth edges.
- Let the leather dry before using the furniture again.

GOOD ADVICE

- Avoid placing leather furniture in direct sunlight.
- Avoid placing leather furniture next to a heat source.
- Avoid desiccation of the air in the room.
- Avoid spilling liquid/Grease on leather furniture.

LAQUERED WOOD

GENERAL INFORMATION

- Never use cleaning abrasives, steel wool or polish; on the contrary, use as mild and lenient a cleaning detergent as possible.
- Always follow the directions for use provided on the cleaning detergent in question.
- No cleaning detergent will take away all types of stains. If specific stains have occurred on the doors, you may have to clean them in another way than suggested in the following.
- The following recommendations only apply where the stains are superficial; they do not apply where the laminate has been penetrated.

MAINTENANCE

DAY-TO-DAY CLEANING

Wipe the door with a clean cloth wrung in a solution of hot water and a universal cleaning detergent(ammonia acceptable) or soap flakes/ a washing detergent or hot water with about 10% vinegar. Finally, wipe off door with a clean, dry cloth.

THOROUGH CLEANING

Wipe off loose dust/dirt. Wring a clean cloth in a solution of water and a universal cleaning detergent(ammonia acceptable). Pour a little extra cleaning detergent on the cloth and wash the door until all stains are dissolved. Alternatively , the cleaning detergent can be applied directly on the stains-leave it for a while to take effect, before wiping it off again. Wash off with clean water. To avoid stripes/blotches, you should finally wipe the table top with a clean, dry cloth until it is completely dry.

STAIN REMOVAL

Warning! Benzene, methylated spirits etc. are inflammables. Only use with caution. Make sure that the room is ventilated.

Ballpoint Pen/Spirit Pen/	Benzene followed by a universal cleaning detergent Wax Crayon
Chewing gum	Benzene or by careful frezeing with carbon
Dioxide	
Coffe /Tea	A universal cleaning detergent
Cosmetics / Shoe Polish/wax	A universal cleaning detergent
Fats /Oils	A universal cleaning detergent or benzene
Finger-Prints	A universal cleaning detergent or methylated spirits/a window cleaning detergent
Indian ink detergant	Benzene followed by a universal cleaning
Lacquer/Glue detergent	Benzene followed by a universal cleaning
Paraffin Wax dioxide	Benzene or by careful freezing with carbon
Printing Ink detergent	Benzene followed by a universal cleaning
Red Wine/Juice	A universal cleaning detergent
Soot /Nicotine	A universal cleaning detergent

Always wash off with clean water. To avoid stripes/blotches you should finally wipe the table top with a clean, dry cloth until it is completely dry.

MAINTENANCE OF LACQUERED SURFACES

The Lacquered surfaces in natural wood do not stand moist heat or alcohol. All spilt liquids must therefore be wiped up immediately. When cleaning, water should be used only in small quantities -preferably just a damp cloth-and the table should subsequently always be wiped with a dry cloth.

The Lacquered surface will take on a patina within the first weeks of use. Make sure that nothing is placed on the surface at the same place for long, as this will result in stains and discolouring. How much and haw fast the surface will patinate depends on the type of wood and the exposure to light.

HİGHGLOSS LACQUER

Surfaces with high-gloss lacquer are less resistant to scratches and Marks than not so glossy and matt surfaces.

CLEANING

Wipe the surface with a soft cloth firmly wrung in sulphonated water.

SCRATCHES

Scratches may ocur and are difficult to remove. A good way to protect the surface is to polish it right from the start with a high-quallity high-gloss car waxwithout any abrasives. If the damage is done, a wax treatment may cover small scratches making them almost invisible.

DAMAGED SURFACES

For deep scratches a slightly abrasive polish can, with great care, be used. However, it involves a risk of rubbing too much. And the surface has to be waxed subsequently with high-gloss car wax.

SOLID WOOD

GENERAL INFORMATION

For maintenance of oiled wood surfaces, use oil, an abrasive sponge and a cloth. For oak and ash, use white pigmented oils and for walnut, use clear oil.

The oil will penetrate the grain of the wood building a dirt and water-repellent coat that protects the wood and gives it finish. The oil also cares for and maintains the light colour of the oak or ash, and leaves a smooth and silk matt surface.

PERIODIC MAINTENANCE

Use oil for periodic maintenance of wooden furniture. For oak and ash, use a white pigmented oil. If the surface becomes too light,use white pigmented oil and clear oil alternately. For walnut, use a clear oil. To prevent the wood from drying out and to maintain the appearanceof the table, we recommend treating the table twice after receiving it, and subsequently three to four times a year or as needed.

Directions :

1. The surface must be thoroughly cleaned and dry. Clean with normal soapy water (not concentrated soap/washing-up

liquid) and wipe dry immediately with a dry cloth. Clean the surface approx. 12 hours before the oil treatment.

2. To ensure proper adhesion, use an abrasive sponge to abrade the surface. It is important to work in the direction of the grain when abradina.

3. Shake the oil bottle well and apply the oil generously using a cloth. The surface must be glistening and the oil allowed 15 to 20 minutes to be absorbed.

4. Remove any excess oil with a lint free cloth until the wood is completely smooth to the touch.

5. Leave the tablet o dry overnight.

6. For optimal results we recommend repeating the treatment in points 2-4 (several times).

7. The oil-treated surface can be used with care after approx. 24 hours. The oil will have hardened full after 7 days, and the table will be completely ready for use.

8. If any dry spots appear within 24 hours of treatment, the treatment should be repeated.

DISPOSAL

Do not pour oil into sewage system. Disposal according to local regulations. Oil – wetted cloths and gloves to be disposed of in closed metal containers to avoid self-ignition.

!WARNING

Oil cloths and sponges may self-ignite if not properly stored. Destroy oil cloths and sponges by rinsing in cold water or keep in airtight metal or glass container. Never pour oil directly onto furniture and never use steel wool.

DAMAGE REPAIR

SMALL SCRATCHES

Small scratches can be smoothened by sanding in the direction of the grain using grit 220 sandpaper. Repeat the oil treatment after sanding.

SCUFF MARKS

DENTS AND SCRATCHES

Most dents can be mended if wood fibres have not been broken. Brush the dents with lukewarm water (the water will raise the wood). Once dry, sand the surface with grit 220 sandpaper. Repeat the oil treatment after sanding.

PENS, WATERCOLOUR ANS MARKERS

Try to remove as much of the stain as possible using heavy blotting paper and a solvent that matches the stain, e.g. alcohol for marker or felt tip pen stains.

INK

Try to remove as much of the stain as possible using blotting paper and an ammonia solution (approx. 8 per cent). Please note that the solution may irritate the eyes, the skin and the respiratory system. Always read and follow the instructions on the product in question.

BURN MARKS

In most cases, superficial burn Marks can be removed by abrasion. Avoid abrading on a local area as this may create a depression. Instead abrade over a larger area. You may want to consult a Professional before you attempt to repair the damage yourself.

NOTE!

When working with abrading materials such as soft cleaning sponges and sandpaper, always work in the direction of the grain. Always abrade over a larger area to avoid creating a depression.

POLYESTER COMPOSITE

MAINTENANCE

The product is made of a special artificial cast stone material, which is hand polished-resulting in the unique, matt surface. The table top is wiped off with a dr yor moist cloth. Any excess water should be wiped off with a dry cloth. Any large stains may be removed with a light solution of an all purpose cleaner. In case of particularly stubborn stains a concentrated all purpose cleaner may be used with subsequent washing off.

PLASTIC LAMINATE

DAY-TO-DAY CLEANING

Wipe the table top with a clean cloth wrung in a solution of hot water and a universal cleaning detergent (ammonia acceptable) or soap flakes/a washing detergent or hot water with about 10% vinegar. Finally, wipe off the table top with a clean, dry cloth.

THOROUGH CLEANING

Wipe off loose dust/dirt. Wring a clean cloth in a solution of water and a universal cleaning detergent (ammonia acceptable). Pour a little extra cleaning on the cloth and wash the table top until all stains are dissolved. Alternatively , the cleaning detergent can be applied directly on the table top/stains-leave it for a while to take effect, before wiping it off again. Wash off with clean water. To avoid stripes/blotches, you should finally wipe the table top with a clean, dry cloth until it is completely dry.

RATTAN

Rattan is a naturel material, consisting of the iner tissue of the stem of the tropical palm, Calamus Rotang. The colour of rattan may vary. This is a characteristic feature of naturel materials and will not be accepted as grounds of complaint.

MAINTENANCE

Rattan will dry if placed in locations with a low humidity (e.g. in rooms with central heating). When rattan dries, it turns hard, and the risk of breaking increases. Rattan furniture must be cleaned regularly. Use a solution of about 1 teaspoon soap flakes to 1-11/2 dl tepid water. Spray the solution onto both sides of the chair with an atomizer and allow it to penetrate into the rattan. Redundant water, if any, can be wiped off with a clean, damp cloth, but only on the front of the chair. The above instructions must be followed. Complaints on grounds of dried out rattan are not accepted

GLOSSARY OF TERMS

'Ad hoc' assessment An assessment specifically written for a particular set of circumstances or construction project

Aperture An opening created by a cut-out through a door leaf that is to receive glazing or other infilling

Approving authority Term used to describe the building control or fire authority

Architrave A trim usually of timber or plastic that covers the joint between a doorframe and the supporting construction. It may be integral with the doorframe or a separate component

Arriss The point at which two planes meet – usually a right angle in connection with doors

Assessment Application of expert knowledge to the data established by a series of fire tests on a door leaf construction or particular design type to extend the scope of the results

Astragal A component usually metal applied at meeting edges in lieu of a rebate. (see clashing strip)

Attestation/attestation of conformity The conferring of approval in relation to a product performance usually in connection with satisfying the essential requirements of the Construction Products Directive

Audit test A term used to describe a routine re-test usually performed as a requirement of a certification scheme at standard intervals e.g. 5-yearly

Automatic release device: Hardware component that, upon receipt of an electrical signal, causes an interruption in the power supply to an automatic hold-open device, so allowing the door to return to the fully closed position

Automatic self-closing device Hardware component which allows a door to return to the fully closed position without human intervention after it has been opened

Back check A function of a door closer that halts or interrupts the opening movement of a door leaf

Bead (glazing) Component of hardwood or mineral based material used to retain glass within apertures

Binding The action of a door leaf jamming at points around its periphery where there is insufficient operating margin

Chamfer A slope from the horizontal or vertical (see splay) Cill An element of a doorframe that is fitted between the jambs at the bottom

Clashing strip A component, usually timber, fixed at a meeting edge to provide a doorstop function as an alternative to a rebate (see astragal)

Classification A performance level assigned to a product following test to a European Standard

Clear opening The usable opening created when the door leaf/leaves are in the fully open position

Cloak type bead Glazing bead that is rebated to provide an overhang over the face of the door leaf to provide cover around the edge of the aperture

Configuration The particular composition and method of operation of a door usually involving a combination of the following options:

- Swing – single or double
- Number of leaves – single, double or more
- Latching – whether latched shut or for use unlatched (with a closer)
- Meeting edge arrangement – square, rebated or rounded
- Door or storey height
- Transom/overpanel/flush overpanel
- Edge detail – square, rebated, rounded
- Glazed or unglazed
- Hardware

Constructional faces Facings of door leaves that restrain movement in the core andcontribute to the fire resistance of the door

Contract definition schedules Contract documentation usually produced by the fire door provider or other specialist that describes the detailed specification and location of all doors

Direct application, (field of) Variations to the specification of the tested specimen that are permitted in BS EN 1634 – 1

Door A door leaf or shutter of one or more leaves, together with its frame and furniture as installed in a building to enable openings in walls provided for the passage of persons, air or objects to be closed when required

Door leaf The hinged, pivoted or sliding element of a door

Door leaf construction A specific combination of inner core with or without internal framing with its subfacings, facings and lippings

Doorframe The perimeter of a door to which is attached the door leaf or leaves, any transom, side panel or overpanel and through which by means of appropriate fixings, the door is attached to the supporting construction

Doorstop (1) An element of a doorframe that arrests the closing movement of a door leaf at the closed position

Doorstop (2) An item of hardware usually floor or wall mounted and so positioned to arrest the opening movement of a door leaf

Envelope The range of door leaf sizes permitted within an assessment

Extended application, (field of) An in-depth review of the particular product design and its performance in tests by a recognised authority that will produce a report describing approved variations

Fanlight A glazed area above a transom

Fire door A complete installed door assembly comprising door frame, door leaves, other panels, hardware, seals and any glazing that when closed is intended to resist the passage of fire and smoke in accordance with specified performance criteria

Fire Test Study Group Informal grouping of fire testing laboratories, originally formed to agree common interpretations to details of test procedures

Firestopping The filling of joints between the doorframe and supporting construction with material/s that will prevent the passage of fire through the joints

First-fix Installation of doors or doorframes as the erection of supporting constructions proceeds

Fitting-in margin The space between the periphery of a doorframe and the inside of a prepared opening

Flush bead Glazing bead that does not project beyond the face of the door leaf

Flush overpanel Overpanel of the same construction as and flush with the plane of the door leaf or leaves

Flush type door leaves Door leaves comprised of a panel of constant thickness

Glazing channel A 'U' section component of any material into which glass is positioned prior to being fixed within an aperture

Global assessment Comprehensive approval report provided by an expert authority that describes a field of extended application relating to a specific door leaf construction, sometimes referred to as a registered design

Harmonised European Standard (hEN) Documentation that identifies product characteristics, performance requirements, test methods, classification and conformity attestation throughout the European Community

Insulating glass Glass that insulates the unexposed face from heat applied on the exposed face

Insulation The ability of a construction to restrict the transfer of heat from the fireexposed face to the protected face within set parameters

Integral doorstop A doorstop created by rebating the doorframe

Integrity The period during which a fire door prevents the passage of fire through the door

Intumescent material Materials which are inert in the cold state but under heating expand volumetrically and are designed to seal gaps within a construction and delay penetration by smoke, flames and hot gas

Jamb The vertical element of a doorframe

Laminate High pressure decorative laminated plastic

Latched door A door in which a latch fitted to the door leaf has been activated to hold the door leaf in the closed position when shut

Lips and lippings Trim usually of hardwood or plastic applied to the edges of door leaves

Meeting edges Edges between double leaf doors or between a door leaf and flush overpanel

Mortise or Mortice A slot or cavity formed to receive an item of hardware or as part of a joint between two pieces of joinery

Mould (verb) The process of machining lengths of timber to a profile

Non-insulating glass Glass that does not insulate the unexposed face from heat applied on the exposed face

Notified Bodies Bodies notified to the European Commission by Member States as being capable of performing certification, production surveillance and initial type testing

Operating gap The space between the edges of a door leaf and the doorframe, floor, threshold or opposing leaf or overpanel that is necessary to enable a door leaf to be opened and closed without binding

Overpanel A panel usually constructed as the door leaf above which it is fitted. The door leaf and overpanel may be separated by a transom. Where no transom is fitted, the overpanel is termed "flush overpanel"

Packing Material used (and the act of installing it) to fill the fitting-in margin at doorframe fixing points

Particular door or product/construction design The specific design of a fire door and its field of direct and extended application that has a fire resisting classification as a result of test

Planted or loose doorstop A doorstop that is a separate component fixed to a doorframe Preparation In the context of hardware, the recess or mortice that is formed to receive an item of hardware

Prepared opening An opening formed with precision in a supporting construction or within a structural opening to receive a second–fixed door

Primary test evidence Evidence of the performance of a fire door that is derived from a full scale fire test on that particular product design by the test sponsor

Product Standard A single document citing all the performance characteristics recognised or required in any of the Member States of the EC and describing:

A reference to all these characteristics The test methods to be used to evaluate the characteristics

The classes (classifications) of the characteristics that are required

The system by which the conformity of the product to the classification is attested

Rack (verb) The levering action applied to hinges and pivots when the opening movement of a door leaf is arrested by contact of the door leaf with a vertical projection such as the doorframe or masonry

reveal

Rebate A step formed in a doorframe or the meeting edge of door leaves/flush overpanels which arrests the movement of the door leaf at the closed position

Recess A cut-out formed in a door leaf or doorframe to allow an item of hardware to be fitted usually flush with the surface

Registered design A term usually applied to a door leaf construction, being a stated combination of materials and components which have been subjected to fire resistance testing and, where appropriate, assessment of extended application of results, and which is submitted to an independent third party certification body as the basis for membership of a certification scheme

Screen A mainly glazed component that contains a door

Second-fix Installation of doors or doorframes into openings in the supporting construction formed to receive them (prepared openings)

Sidepanels A lateral extension of a door usually to provide light or vision

Smokestopping The filling of joints between the doorframe and supporting construction with material/s that will prevent the passage of smoke or gaseous products of combustion through the joints

Splay/splayed A bevel, usually 2 – 3° applied to the edge of a door leaf to assist in providing an operating gap that will allow it to pass the edge of an opposing door leaf or doorframe during operation of the door leaf

Splayed bead Glazing bead that has a sloping top edge

Square bead Glazing bead that is rectangular in section – not splayed

Square meeting edge A plain meeting edge i.e. with no splay, rebate or rounding

Storey height door A door in which the doorframe occupies the space between the floor and ceiling

Structural opening Opening in a supporting construction (see prepared opening)

Stud Components of wood or metal that when assembled together become a framework to which board facings are fixed to form a 'stud partition'

Subframe A frame supplementary to the main doorframe that is used to line a structural opening as a preliminary to the installation of a door. This may take the form of a template to which the supporting

construction is built or may be second-fixed into a prepared opening

Supporting construction The wall or partition into which a door is fixed

Swing The opening movement of a door leaf: either single swing opening in one direction or double swing opening in both directions

Tested design A specific combination of materials and components which has been exposed to a fire resistance test and achieved a stated performance

Threshold The floor beneath a closed door leaf or a component, not part of the doorframe, used in that location

Transitional Period The time following the availability of an hEN during which Member States permit the use of products that comply with existing national standards prior to the withdrawal of national standards

Transom A horizontal component of a doorframe fitted in a position to correspond with the top edge of the door leaf to act as a door frame head below glazing or a solid infill panel

UKAS United Kingdom Accreditation Service – organisation responsible for monitoring the capabilities of the fire testing laboratories

Vision panel A panel of transparent or translucent material fitted into a door leaf to provide a degree of visibility from one side of a door leaf to the other

NOTES

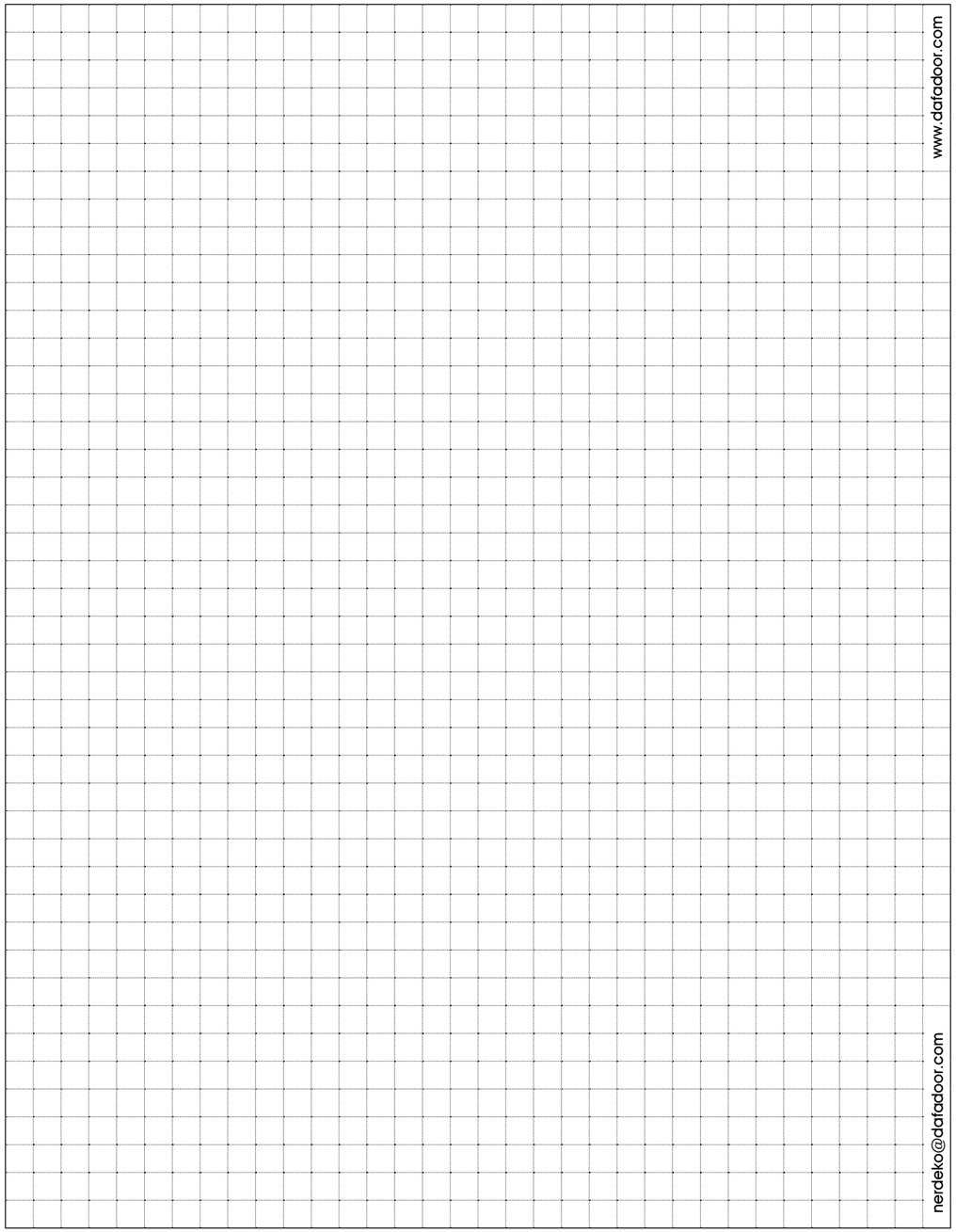

FOR HOTELS SPECIAL SECTION

60 MINUTES FIRE RATED

38 dB SOUND ISOLATION

SURFACE FINISH

www.dafadoor.com

VENEER
LACQUERED
LAMINATE

Please do not forget these;
Wood is a product of nature. Each tree has its own structure and grain are due to nature and therefere can never been seen as fault or lack of quality.
While this sample is representative of wood fihish to be supplied, slight differences in color and grain are inherent to all wood products. There may be variations in color, texture and grain structure between this samples and the actual finished product, these variations are not considered defects. Also wood naturally ages over a period of time, changing color as a result of exposure to light sources. We recommend this sample be discarded and replaced 24 mounths from date it showned below.

VENEER

A NATURAL VENEER


STRAIGHT OAK

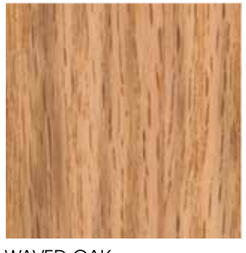
WAVED OAK


FRENCH OAK


BEECH


ANIGRE


MAKORE


BUBINGA

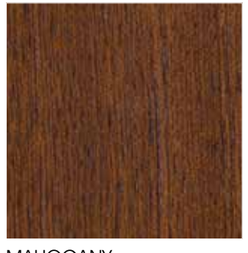
MAHOGANY

B ALPI VENEER


BAMBOO


ALPI TEAK


ALPI OAK WALNUT


ALPI WENGE


ALPI EBONY


ALPI OAK


ALPI ANIGRE


ALPI GREY OAK ART

C NATURAL VENEER


MAPLE


AFROMOSIA


CHERRY


LIGHT CHERRY


DARK CHERRY


RED CHERRY


WAVED AMERICAN WALNUT


STRAIGHT AMERICAN VALNUT

LACQUERED

RAL 9010

RAL 1013

RAL 1001

RAL 1002

RAL 1011

RAL 1019

RAL 3022

RAL 1007

RAL 6019

RAL 5003

RAL 7016

RAL 9006

RAL 3012

RAL 8004

RAL 8002

RAL 8024

RAL 3003

RAL 3005

RAL 7038

RAL 5014

RAL 4009

RAL 7004

RAL 7037

RAL 9005

LAMINATE

A PLAIN COLORS

B WOOD PATTERNS

“SELECTED REFERENCES”

HOTEL • RITZ CARLTON HOTEL - MOSCOW-RUSSIA • HILTON HOTEL ANKARA-TURKEY • HILTON HOTEL - ISTANBUL • RADISSON HOTEL TASHKENT-UZBEKISTAN • RADISSON HOTEL & RESORT BAKU-AZERBAIJAN • MARRIOTT HOTEL - INDIA • MARRIOTT AIRPORT HOTEL - INDIA • CAPELLA CASTLEMARTYR HOTEL&GOLF RESORT-IRELAND • CAPELLA CASTLEMARTYR HOTEL / OLD SCHOOL-IRELAND • HOTEL NOVOTEL ISTANBUL-TURKEY • HOTEL NOVOTEL TRABZON-TURKEY • YACHT HAFEN RESIDENZ ROSTOCK-GERMANY • KERVANSARAY HOTEL LARA ANTALYA-TURKEY • LE MERIDIEN HOTEL TASHKENT-UZBEKISTAN • KOLIN HOTEL CANAKKALE-TURKEY • THE COLONY HOTEL KYRENIA-CYPRUS • ATLANTIS HOTEL LIMAK A.S. ANTALYA-TURKEY • SERDAR HOTEL TURKMENBASI - TURKMENISTAN • ZVEZDNIY HOTEL SOCHI-RUSSIA • QUALITY HOTEL TYUMEN - RUSSIA • MOLNIA OTEL TUAPSE - RUSSIA • CINAR HOTEL GOREME - TURKEY • IBIS HOTEL ISTANBUL-TURKEY • IBIS HOTEL ESKISEHIR-TURKEY • **AIRPORT** • MUSCAT INTERNATIONAL AIRPORT - OMAN • NAVOI AIRPORT-UZBEKISTAN • UCHKUDUK AIRPORT - UZBEKISTAN • SUPSA AIRPORT - GEORGIA • SAMARKAND AIRPORT - UZBEKISTAN • BUHARA AIRPORT - UZBEKISTAN • URGENCH AIRPORT - UZBEKISTAN • **OFFICE / HEAD QUARTER / BUSINESS CENTER** • BARRIKADNAYA BUSINESS CENTER - RUSSIA • KALEIDESCOPE SHOPPING CENTER AND MOVIE THEATER • HORUS BUSINESS COMPLEX - ANT CONST. - RUSSIA • AFD (Almaty Financial District) KAZKOMMERTZ BANK HQ, YUKSEL CONST. ALMATY-KAZAKHSTAN • CAPITAL GROUP HQ MOSCOW -RUSSIA • AFD (Almaty Financial District) BUILDINGS ALMATY-KAZAKHSTAN • DELOITTE INTERNATIONAL HQ ALMATY-KAZAKHSTAN • DEUTSCHE BANK HQ MOSCOW-RUSSIA • L&W LAW OFFICE MOSCOW-RUSSIA • MTS HQ (SISTEMA GALS) MOSCOW-RUSSIA • THE WORLD BANK HQ TASHKENT-UZBEKISTAN • ASTANA TOWER (WORLD BANK - EUROPEAN BANK) ASTANA-KAZAKHSTAN • VINSAN COMPANY GENERAL DIRECTORATE ANKARA-TURKEY • BUSINESS CENTER TASHKENT-UZBEKISTAN • GOVERNMENT GUEST HOUSE KÖKCETAU-KAZAKHSTAN • UZBEKISTAN PETROLEUM AND GAS MINISTRY - UZBEKISTAN • NBU BANK OFFICES TASHKENT-UZBEKISTAN • TYUMENSKI KREDIT BANK - RUSSIA • İŞ BANK ANKARA-TURKEY • TURKEY KALKINMA BANK GENERAL MANAGEMENT BUILDING ANKARA-TURKEY • **HOSPITAL** • BARNAUL HOSPITAL - RUSSIA • CHABAROWSK HOSPITAL - RUSSIA • KRASNODAR HOSPITAL - RUSSIA • ASTRACHAN HOSPITAL -RUSSIA • PENZA HOSPITAL -RUSSIA • NAMSA HOSPITAL-AFGHANISTAN • WCP HOSPITAL-LIBYA • CENTRAL CLINIC HOSPITAL BAKU-AZERBAIJAN • HACETTEPE HOSPITAL EMERGENCY SERVICE ANKARA-TURKEY • **RESIDENTIAL** • FLAME TOWERS - AZERBAIJAN • BAKU PRESIDENTIAL RESIDENCE, BESIX - BAKU-AZERBAIJAN • AGAOGLU MYWORLD ISTANBUL-TURKEY • MESA AKASYA HOUSES ANKARA-TURKEY • GAZPROM HOUSES(VILLAS) MOSCOW-RUSSIA • GAZPROM HOUSE COMPLEX MOSCOW-RUSSIA • **GOVERNMENT / DIPLOMATIC BUILDING / MILITARY** • JORDAN ARMED FORCES COMPLEX AMMAN-JORDAN • KAZAKHSTAN SENATO BUILDING ASTANA-KAZAKHSTAN • PARLIAMENT BUILDING ASTANA- KAZAKHSTAN • DIPLOMATIC HOUSING COMPLEX ASTANA - KAZAKHSTAN • UZBEKISTAN PRIME MINISTRY RESIDENCE TASHKENT - UZBEKISTAN • COUNCIL of MINISTERS ASSEMBLY HALL ANKARA-TURKEY • UZBEKISTAN PRIME MINISTRY OFFICE TASHKENT-UZBEKISTAN • PRIME MINISTRY BUILDING RENOVATION ANKARA-TURKEY • UZBEKISTAN PETROLEUM AND GAS MINISTRY TASHKENT-UZBEKISTAN • **EMBASSY** • US. EMBASSY COMPLEX - BELGRAD • AMERICAN EMBASSY TBILISI-GEORGIA • AMERICAN EMBASSY TASHKENT-UZBEKISTAN • JAPAN EMBASSY-UZBEKISTAN • AUSTRALIA EMBASSY ANKARA-TURKEY • CANADA EMBASSY ANKARA-TURKEY • SPANISH EMBASSY ANKARA-TURKEY • ARGENTINA EMBASSY ANKARA-TURKEY • GERMAN EMBASSY GUEST HOUSE ANKARA-TURKEY • **CIVIC** • CAPITAL CITY SHOPPING CENTER MOSCOW-RUSSIA • SIM ANKARA-TURKEY • NBU ART GALLERY TASHKENT-UZBEKISTAN • ANKARA SUBWAY STATIONS ANKARA-TURKEY • TIVOLINO (SQUASH FITNESS CENTER) ANKARA - TURKEY • **FACTORY** • SARBAST BEER FACTORY TASHKENT-UZBEKISTAN • MERCEDES-BENZ FACTORY HQ AKSARAY-TURKEY • **SHOWROOM / COMMERCIAL BUSINESS / RETAIL STORE / RESTAURANTS** • BARBARA BARRY SHOWROOM MOSCOW-RUSSIA • TEKIN ACAR COSMETICS ANKARA / ISTANBUL / ADANA-TURKEY • D & R BOOK - MUSIC STORES -TURKEY • FAST FOOD DECORATION TYUMEN-RUSSIA • AUSTIN OF ANKARA İZMİR / ANKARA-TURKEY • PERLA HOME COLLECTION ANKARA-TURKEY • BEST SUISSE PATISSERIE ANKARA-TURKEY • ALATURKA (PIZZA DAYS) ANKARA-TURKEY • TIVOLI FAST FOOD ANKARA-TURKEY • HONDA SHOWROOM ANKARA-TURKEY • TRANS DELTA TOURISM ANKARA-TURKEY • BOSS COMPUTER ANKARA-TURKEY • BUDGET RENT A CAR ANKARA-TURKEY • AVIS RENT A CAR İSTANBUL / İZMİR / ADANA / ANKARA - TURKEY

EXPERT ON DOORS

Dafadoor is a company of Nergiz Group

www.dafadoor.com

DAFADOOR KAPI VE MOBİLYA ÜRÜNLERİ SAN. TİC. LTD. ŞTİ.
DAFADOOR DOOR AND FURNITURE PRODUCTS IND. TRADE LTD. CO.

ESENBOĞA HAVAALANI YOLU
ÇUBUK AYRIMI 1. KM
ÇUBUK 06145 ANKARA, TÜRKİYE

Tel : +90 (312) 398 11 03
Fax: +90 (312) 398 11 06

nerdeko@dafadoor.com

A NERGİZ DECORATION COMPANY

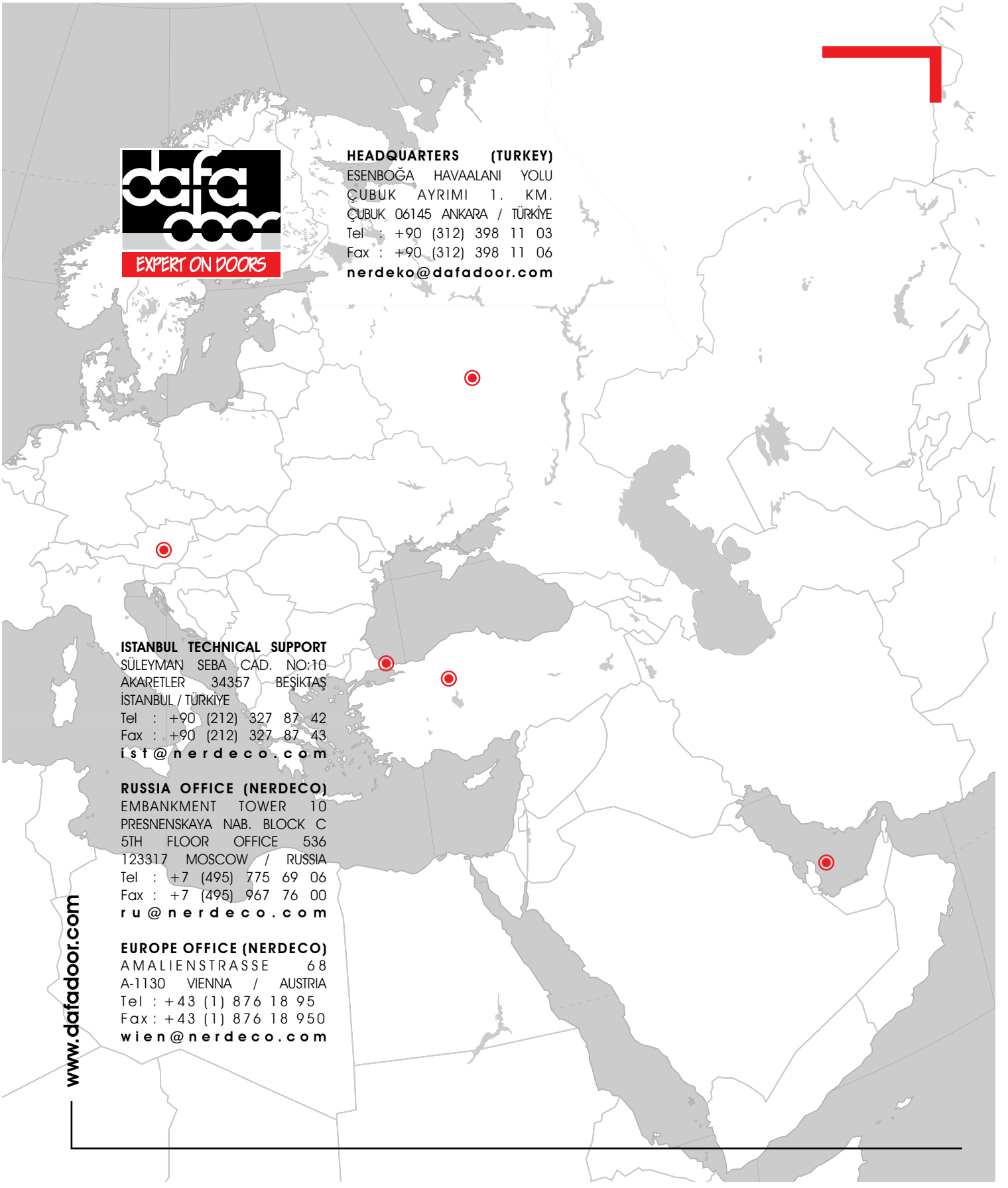

HEADQUARTERS (TURKEY)
ESENBOĞA HAVAALANI YOLU
ÇUBUK AYRIMI 1. KM.
ÇUBUK 06145 ANKARA / TÜRKİYE
Tel : +90 (312) 398 11 03
Fax : +90 (312) 398 11 06
nerdeko@dafadoor.com

ISTANBUL TECHNICAL SUPPORT
SÜLEYMAN SEBA CAD. NO:10
AKARETLER 34357 BEŞİKTAŞ
İSTANBUL / TÜRKİYE
Tel : +90 (212) 327 87 42
Fax : +90 (212) 327 87 43
ist@nerdeco.com

RUSSIA OFFICE (NERDECO)
EMBANKMENT TOWER 10
PRESNENSKAYA NAB. BLOCK C
5TH FLOOR OFFICE 536
123317 MOSCOW / RUSSIA
Tel : +7 (495) 775 69 06
Fax : +7 (495) 967 76 00
ru@nerdeco.com

EUROPE OFFICE (NERDECO)
AMALIENSTRASSE 68
A-1130 VIENNA / AUSTRIA
Tel : +43 (1) 876 18 95
Fax : +43 (1) 876 18 950
wien@nerdeco.com

www.dafadoor.com